UTILITY LOCATE PERMIT REQUEST PROCEDURES

1. An approved Utility Locate Permit is required to locate utilities prior to excavation.
2. Forms are found online; www.yyc.com. Click on the "Business at YYC" tab and click on "Forms and Applications"
3. Complete the Utility Locate Permit Application and submit at least two business days prior to scheduled work. Planning & Engineering may be contacted by one of the following methods:
   - permits@yyc.com
   - drop off at Planning & Engineering reception located on Mezzanine Level, Airport Terminal Building.
4. All completed request forms must have a location plan attached and must identify the Calgary Airport Authority Project Manager or Airport Authority contact name.
5. Upon Approval, the Permit will be returned to the contractor via email.
6. A copy of the approved permit will be sent to Fuji Pipelocators to confirm Calgary Airport Authority Approval for work to commence.
7. The contractor is responsible for contacting and scheduling with the Calgary Airport Authority's approved locating firm. Payment for this service will be made directly by the Calgary Airport Authority.

   Fuji Pipelocators Ltd. (403) 277-3300
   Please quote Contract P2013-3207 and your Permit number

   If the contractor is working for a company other than the Calgary Airport Authority, Fuji Pipelocators will invoice the contractor directly.

   No work will be performed without proof of an approved permit.
8. Permits are valid for a two-week period unless otherwise permitted.
9. **Hydro vacuuming is required to expose all utilities prior to construction work proceeding**.
10. An application for an Excavation Permit can only be applied for once the locate report has been received.

AIRSIDE LOCATES – SPECIFIC PROCEDURES

1. The contractor agrees to accompany a Calgary Airport Authority airfield electrician to discuss operational aspects of construction work.
2. The contractor must comply with all instructions from the Calgary Airport Authority's airfield **The airfield electrician will only locate the airfield lighting.** NavCanada cables, telecommunications, fuel, gas, water, storm, and sanitary lines, must be located by Calgary Airport Authority's approved locator.
3. Hydro vacuuming is required to expose all utilities prior to construction work proceeding.

UTILITY LOCATE PERMIT APPLICATION

For Office Use Only **Permit #**

Date: _____ Original Request: ☐ Revised Request: ☐

Send Request To: **Planning & Engineering** **Email: permits@yyc.com**

Project Name: _____ **Project Number:**

Calgary Airport Authority Contact: **CIP Number:**

The Calgary Airport Authority has engaged the following company to perform utility locates at the airport:

Fuji Pipelocators Ltd. - 403-277-3300.
Please quote Contract P2013-3207 and your Permit Number

If the contractor is working for a company other than the Calgary Airport Authority, Fuji Pipelocators Ltd. will invoice the contactor directly.

Company Requesting Locate: _____

Billing Address (if required): _____

Contact Name: _____

Email: _____

Phone: _____

Cell: _____

Scope of Work to be Completed:

Security Escort Required: ☐ Yes ☐ No If yes, submit Security Escort Form (see YYC.com) Request Submitted ☐

Requested Date of Locate: Start: _____ End: _____

Requested Time of Locate:
24 hour clock MUST be used Start Time: _____ End Time: _____

Locate Reports are valid for a period of one (1) month.

YYC™ CALGARY AIRPORT AUTHORITY

PLANNING & ENGINEERING

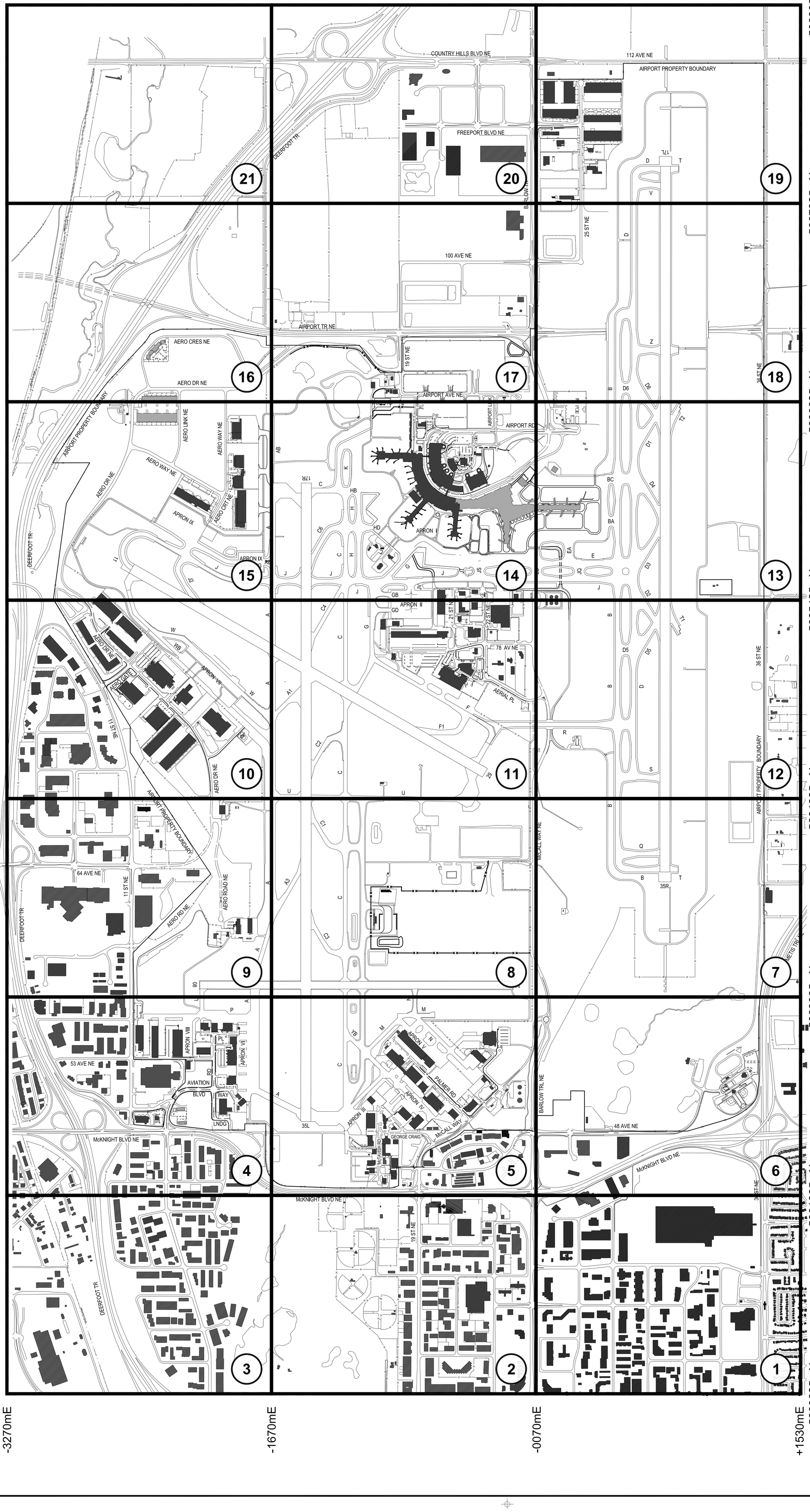

N

LOCATION OF WORK REQUEST

MARK THE LOCATION OF THE WORK SITE WITH AN 'X' ON THIS MAP. CLICK ON THE APPROPRIATE MAP PAGE, THEN MARK THE LOCATION OF THE WORK SITE WITH AN 'X'.

INCLUDE THIS PAGE AND THE MARKED PAGE WHEN SUBMITTING APPLICATION.

COMPLETE THE FOLLOWING:

GRID COORDINATE:

_____E

_____N

REQUESTED DATE:

_____

REQUESTED TIME:

_____

SUBMIT COMPLETED FORMS TO: PERMITS@YYC.COM

Users of this information should verify any/all critical information, systems and dimensions.

Projection: 3 degree Transverse Mercator, Central Meridian 114.
Survey Control: North American Datum, 1983 (NAD83)

Compiled photogammetrically by ATLIS Geomatics, Inc.
Date of Aerial Photography, August 04, 2012

Date	Revision	By

Scale 1 : 10000 — 100 0 100 200 300 400 500 800 METRES

Site: CALGARY INTERNATIONAL AIRPORT

Title: SITE GRID PLAN

GRID INDEX

OVERALL

Date: JANUARY 2015

YYC-SITE-GRID

Drawn By	Checked By	Project No.	Sheet
			1 OF 1

Name: yyc-site-grid.dwg Date: Jan 21, 2015 Time: 8:04 AM

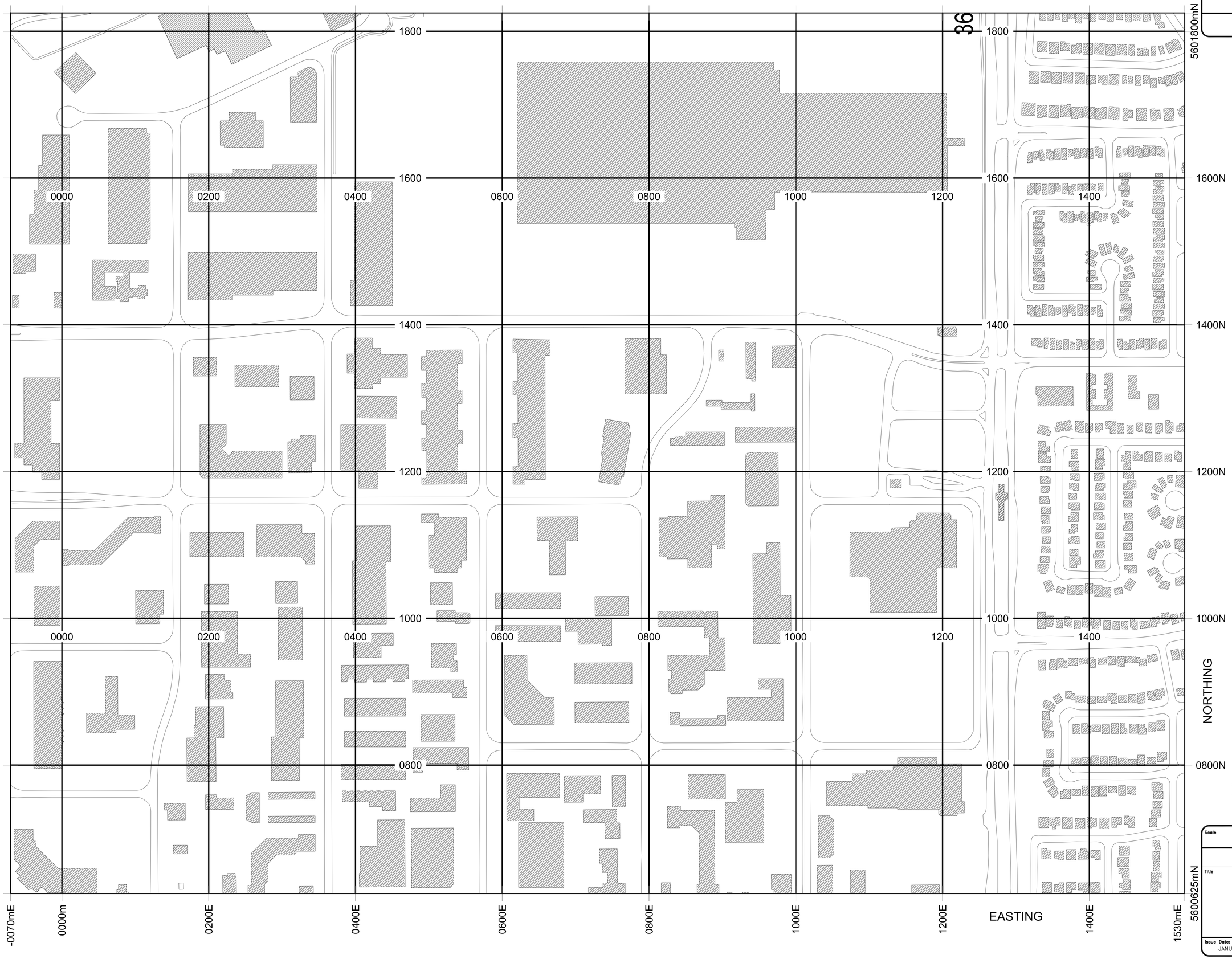

YYC™ CALGARY AIRPORT AUTHORITY

PLANNING & ENGINEERING

EXAMPLE OF METHOD USED TO GIVE A REFERENCE TO THE NEAREST 50 METRES

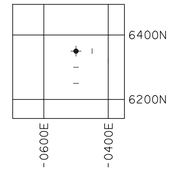

REFERENCE POINT:

GRID LINES ARE AT 200 METRE INCREMENTS

EASTING:
- -FOR NEGATIVE NUMBERS, READ NUMBER ON GRID LINE IMMEDIATELY TO THE RIGHT OF POINT.
- -ESTIMATE FOURTHS OF A SQUARE FROM THIS LINE WESTWARD FOR NEGATIVE NUMBERS.
- -FOR POSITIVE NUMBERS, READ NUMBER ON GRID LINE IMMEDIATELY TO THE LEFT OF POINT.
- -ESTIMATE FOURTHS OF A SQUARE FROM THIS LINE EASTWARD FOR POSITIVE NUMBERS.

NORTHING:
- -READ NUMBER ON GRID LINE IMMEDIATELY BELOW POINT.
- -ESTIMATE FOURTHS OF A SQUARE FROM THIS LINE NORTHWARD.

GRID REFERENCE: -0500E BY 6350N

TO VERBALLY DESCRIBE A LOCATION:

FOR NEGATIVE NUMBERS SAY:
"NEGATIVE ZERO-FIVE-ZERO-ZERO BY SIX-THREE-FIVE-ZERO"

FOR POSITIVE NUMBERS SAY:
"POSITIVE ZERO-FIVE-ZERO-ZERO BY SIX-THREE-FIVE-ZERO"

GRID SHOWN IS BASED ON AN ABBREVIATED FORM OF THE NAD83 3TM SYSTEM USED ON ALL YYC RECORD DRAWINGS.

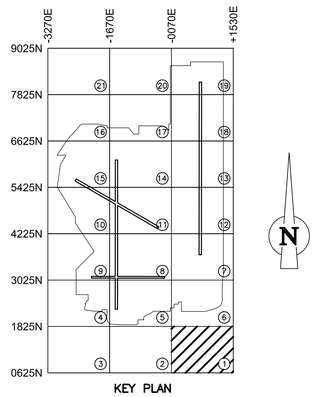

KEY PLAN

Users of this information should verify any/all critical information, systems and dimensions.

Projection: 3 degree Transverse Mercator, Central Meridian 114.
Survey Control: North American Datum, 1983 (NAD83)

Compiled photogammetrically by ATLIS Geomatics Inc.
Date of Aerial photography, July 2014.

Scale 20 0 20 40 60 80 100 180 METRES

CALGARY AIRPORT

Title

SITE GRID PLAN

1 OF 21

Issue Date: JANUARY 2015

YYC–SITE–GRID

Name: yyc-site-grid.dwg Plot Date: Jan 21, 2015 Time: 8:05 AM

McKNIGHT BLVD NE

19 ST NE

1800 1600 1400 1200 1000 0800

-1600 -1400 -1200 -1000 -0800 -0600 -0400 -0200

5601800mN

1600N 1400N 1200N 1000N 0800N

NORTHING

-1670mE -1600E -1400E -1200E -1000E -0800E -0600E -0400E -0200E -0070mE

EASTING

5600625mN

YYC™ CALGARY AIRPORT AUTHORITY

PLANNING & ENGINEERING

EXAMPLE OF METHOD USED TO GIVE A REFERENCE TO THE NEAREST 50 METRES

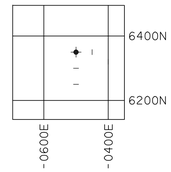

REFERENCE POINT:

GRID LINES ARE AT 200 METRE INCREMENTS

EASTING:
- -FOR NEGATIVE NUMBERS, READ NUMBER ON GRID LINE IMMEDIATELY TO THE RIGHT OF POINT.
- -ESTIMATE FOURTHS OF A SQUARE FROM THIS LINE WESTWARD FOR NEGATIVE NUMBERS.
- -FOR POSITIVE NUMBERS, READ NUMBER ON GRID LINE IMMEDIATELY TO THE LEFT OF POINT.
- -ESTIMATE FOURTHS OF A SQUARE FROM THIS LINE EASTWARD FOR POSITIVE NUMBERS.

NORTHING:
- -READ NUMBER ON GRID LINE IMMEDIATELY BELOW POINT.
- -ESTIMATE FOURTHS OF A SQUARE FROM THIS LINE NORTHWARD.

GRID REFERENCE: -0500E BY 6350N

TO VERBALLY DESCRIBE A LOCATION:

FOR NEGATIVE NUMBERS SAY:
"NEGATIVE ZERO-FIVE-ZERO-ZERO BY SIX-THREE-FIVE-ZERO"

FOR POSITIVE NUMBERS SAY:
"POSITIVE ZERO-FIVE-ZERO-ZERO BY SIX-THREE-FIVE-ZERO"

GRID SHOWN IS BASED ON AN ABBREVIATED FORM OF THE NAD83 3TM SYSTEM USED ON ALL YYC RECORD DRAWINGS.

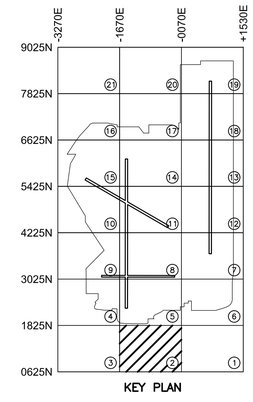

KEY PLAN

Users of this information should verify any/all critical information, systems and dimensions.

Projection: 3 degree Transverse Mercator, Central Meridian 114.
Survey Control: North American Datum, 1983 (NAD83)

Compiled photogammetrically by ATLIS Geomatics Inc.
Date of Aerial photography, July 2014.

Scale 20 0 20 40 60 80 100 180 METRES

CALGARY AIRPORT

Title

SITE GRID PLAN

2 OF 21

Issue Date: JANUARY 2015

YYC-SITE-GRID

Name: yyc-site-grid.dwg Plot Date: Jan 21, 2015 Time: 8:07 AM

YYC™ CALGARY AIRPORT AUTHORITY

PLANNING & ENGINEERING

DEERFOOT TR

CANADIAN PACIFIC RAILWAY

5601800mN

1800 1600 1400 1200 1000 0800

1600N 1400N 1200N 1000N 0800N

-3200 -3000 -2800 -2600 -2400 -2200 -2000 -1800

NORTHING

EASTING

5600625mN

-3270mE -3200E -3000E -2800E -2600E -2400E -2200E -2000E -1800E -1670mE

EXAMPLE OF METHOD USED TO GIVE A REFERENCE TO THE NEAREST 50 METRES

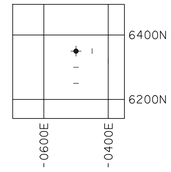

REFERENCE POINT:

GRID LINES ARE AT 200 METRE INCREMENTS

EASTING:
- -FOR NEGATIVE NUMBERS, READ NUMBER ON GRID LINE IMMEDIATELY TO THE RIGHT OF POINT.
- -ESTIMATE FOURTHS OF A SQUARE FROM THIS LINE WESTWARD FOR NEGATIVE NUMBERS.
- -FOR POSITIVE NUMBERS, READ NUMBER ON GRID LINE IMMEDIATELY TO THE LEFT OF POINT.
- -ESTIMATE FOURTHS OF A SQUARE FROM THIS LINE EASTWARD FOR POSITIVE NUMBERS.

NORTHING:
- -READ NUMBER ON GRID LINE IMMEDIATELY BELOW POINT.
- -ESTIMATE FOURTHS OF A SQUARE FROM THIS LINE NORTHWARD.

GRID REFERENCE: -0500E BY 6350N

TO VERBALLY DESCRIBE A LOCATION:

FOR NEGATIVE NUMBERS SAY:
"NEGATIVE ZERO-FIVE-ZERO-ZERO BY SIX-THREE-FIVE-ZERO"

FOR POSITIVE NUMBERS SAY:
"POSITIVE ZERO-FIVE-ZERO-ZERO BY SIX-THREE-FIVE-ZERO"

GRID SHOWN IS BASED ON AN ABBREVIATED FORM OF THE NAD83 3TM SYSTEM USED ON ALL YYC RECORD DRAWINGS.

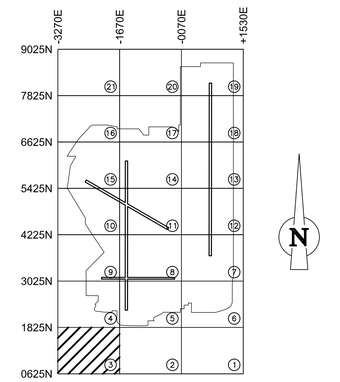

KEY PLAN

Users of this information should verify any/all critical information, systems and dimensions.

Projection: 3 degree Transverse Mercator, Central Meridian 114.
Survey Control: North American Datum, 1983 (NAD83)

Compiled photogammetrically by ATLIS Geomatics Inc.
Date of Aerial photography, July 2014.

Scale 20 0 20 40 60 80 100 180 METRES

CALGARY AIRPORT

Title

SITE GRID PLAN

3 OF 21

Issue Date: JANUARY 2015

YYC–SITE–GRID

Name: YYC-site-grid.dwg Plot Date: Jan 21, 2015 Time: 8:07 AM

YYC™ CALGARY AIRPORT AUTHORITY

PLANNING & ENGINEERING

EXAMPLE OF METHOD USED TO GIVE A REFERENCE TO THE NEAREST 50 METRES

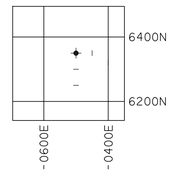

REFERENCE POINT:

GRID LINES ARE AT 200 METRE INCREMENTS

EASTING:
- -FOR NEGATIVE NUMBERS, READ NUMBER ON GRID LINE IMMEDIATELY TO THE RIGHT OF POINT.
- -ESTIMATE FOURTHS OF A SQUARE FROM THIS LINE WESTWARD FOR NEGATIVE NUMBERS.
- -FOR POSITIVE NUMBERS, READ NUMBER ON GRID LINE IMMEDIATELY TO THE LEFT OF POINT.
- -ESTIMATE FOURTHS OF A SQUARE FROM THIS LINE EASTWARD FOR POSITIVE NUMBERS.

NORTHING:
- -READ NUMBER ON GRID LINE IMMEDIATELY BELOW POINT.
- -ESTIMATE FOURTHS OF A SQUARE FROM THIS LINE NORTHWARD.

GRID REFERENCE: -0500E BY 6350N

TO VERBALLY DESCRIBE A LOCATION:

FOR NEGATIVE NUMBERS SAY:
"NEGATIVE ZERO-FIVE-ZERO-ZERO BY SIX-THREE-FIVE-ZERO"

FOR POSITIVE NUMBERS SAY:
"POSITIVE ZERO-FIVE-ZERO-ZERO BY SIX-THREE-FIVE-ZERO"

GRID SHOWN IS BASED ON AN ABBREVIATED FORM OF THE NAD83 3TM SYSTEM USED ON ALL YYC RECORD DRAWINGS.

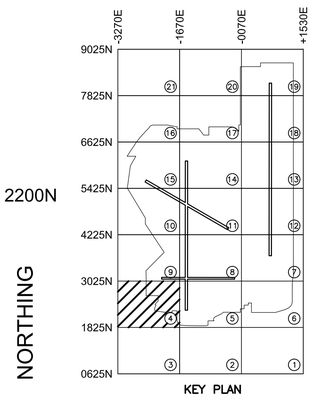

KEY PLAN

Users of this information should verify any/all critical information, systems and dimensions.

Projection: 3 degree Transverse Mercator, Central Meridian 114.
Survey Control: North American Datum, 1983 (NAD83)

Compiled photogammetrically by ATLIS Geomatics Inc.
Date of Aerial photography, July 2014.

Scale 20 0 20 40 60 80 100 180 METRES

CALGARY AIRPORT

Title

SITE GRID PLAN

4 OF 21

Issue Date: JANUARY 2015

YYC–SITE–GRID

Name: yyc-site-grid.dwg Plot Date: Jan 21, 2015 Time: 8:08 AM

YYC™ CALGARY AIRPORT AUTHORITY

PLANNING & ENGINEERING

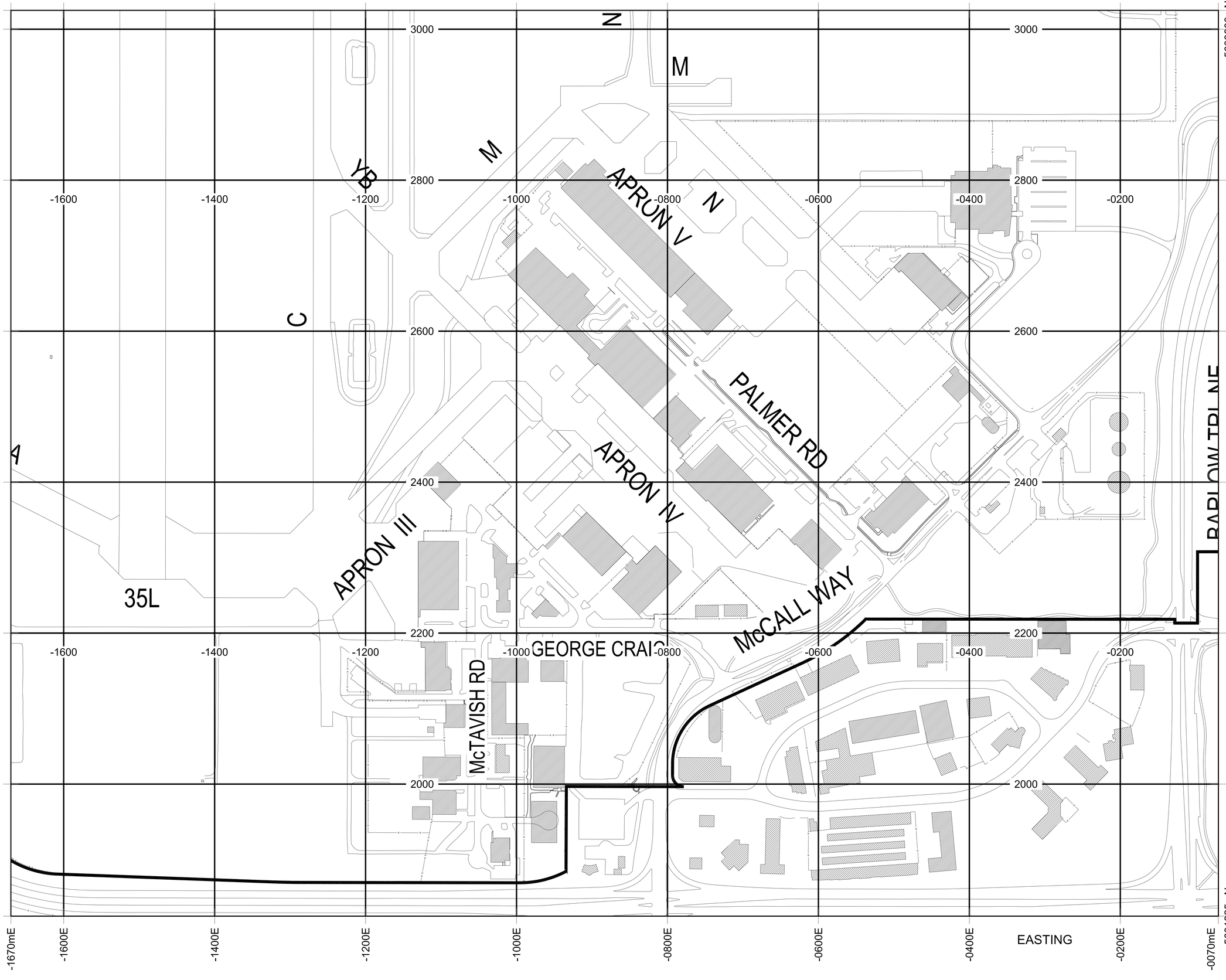

EXAMPLE OF METHOD USED TO GIVE A REFERENCE TO THE NEAREST 50 METRES

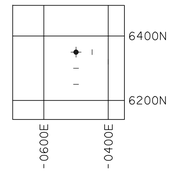

REFERENCE POINT:

GRID LINES ARE AT 200 METRE INCREMENTS

EASTING:
- -FOR NEGATIVE NUMBERS, READ NUMBER ON GRID LINE IMMEDIATELY TO THE RIGHT OF POINT.
- -ESTIMATE FOURTHS OF A SQUARE FROM THIS LINE WESTWARD FOR NEGATIVE NUMBERS.
- -FOR POSITIVE NUMBERS, READ NUMBER ON GRID LINE IMMEDIATELY TO THE LEFT OF POINT.
- -ESTIMATE FOURTHS OF A SQUARE FROM THIS LINE EASTWARD FOR POSITIVE NUMBERS.

NORTHING:
- -READ NUMBER ON GRID LINE IMMEDIATELY BELOW POINT.
- -ESTIMATE FOURTHS OF A SQUARE FROM THIS LINE NORTHWARD.

GRID REFERENCE: -0500E BY 6350N

TO VERBALLY DESCRIBE A LOCATION:

FOR NEGATIVE NUMBERS SAY:
"NEGATIVE ZERO-FIVE-ZERO-ZERO BY SIX-THREE-FIVE-ZERO"

FOR POSITIVE NUMBERS SAY:
"POSITIVE ZERO-FIVE-ZERO-ZERO BY SIX-THREE-FIVE-ZERO"

GRID SHOWN IS BASED ON AN ABBREVIATED FORM OF THE NAD83 3TM SYSTEM USED ON ALL YYC RECORD DRAWINGS.

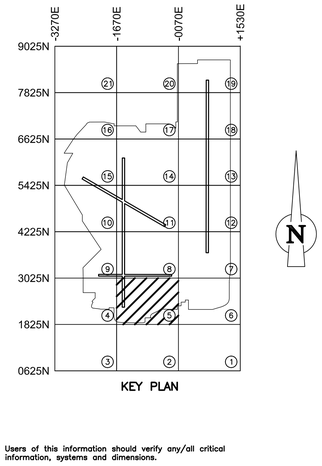

KEY PLAN

Users of this information should verify any/all critical information, systems and dimensions.

Projection: 3 degree Transverse Mercator, Central Meridian 114.
Survey Control: North American Datum, 1983 (NAD83)

Compiled photogammetrically by ATLIS Geomatics Inc.
Date of Aerial photography, July 2014.

Scale 20 0 20 40 60 80 100 180 METRES

CALGARY AIRPORT

Title

SITE GRID PLAN

5 OF 21

Issue Date: JANUARY 2015

YYC–SITE–GRID

Name: yyc-site-grid.dwg Plot Date: Jan 21, 2015 Time: 8:08 AM

YYC™ CALGARY AIRPORT AUTHORITY

PLANNING & ENGINEERING

EXAMPLE OF METHOD USED TO GIVE A REFERENCE TO THE NEAREST 50 METRES

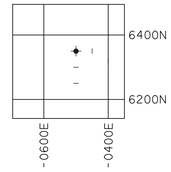

REFERENCE POINT:

GRID LINES ARE AT 200 METRE INCREMENTS

EASTING:
- -FOR NEGATIVE NUMBERS, READ NUMBER ON GRID LINE IMMEDIATELY TO THE RIGHT OF POINT.
- -ESTIMATE FOURTHS OF A SQUARE FROM THIS LINE WESTWARD FOR NEGATIVE NUMBERS.
- -FOR POSITIVE NUMBERS, READ NUMBER ON GRID LINE IMMEDIATELY TO THE LEFT OF POINT.
- -ESTIMATE FOURTHS OF A SQUARE FROM THIS LINE EASTWARD FOR POSITIVE NUMBERS.

NORTHING:
- -READ NUMBER ON GRID LINE IMMEDIATELY BELOW POINT.
- -ESTIMATE FOURTHS OF A SQUARE FROM THIS LINE NORTHWARD.

GRID REFERENCE: -0500E BY 6350N

TO VERBALLY DESCRIBE A LOCATION:

FOR NEGATIVE NUMBERS SAY:
"NEGATIVE ZERO-FIVE-ZERO-ZERO BY SIX-THREE-FIVE-ZERO"

FOR POSITIVE NUMBERS SAY:
"POSITIVE ZERO-FIVE-ZERO-ZERO BY SIX-THREE-FIVE-ZERO"

GRID SHOWN IS BASED ON AN ABBREVIATED FORM OF THE NAD83 3TM SYSTEM USED ON ALL YYC RECORD DRAWINGS.

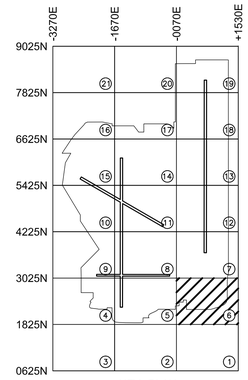

KEY PLAN

Users of this information should verify any/all critical information, systems and dimensions.

Projection: 3 degree Transverse Mercator, Central Meridian 114.
Survey Control: North American Datum, 1983 (NAD83)

Compiled photogammetrically by ATLIS Geomatics Inc.
Date of Aerial photography, July 2014.

Scale 20 0 20 40 60 80 100 180 METRES

CALGARY AIRPORT

Title

SITE GRID PLAN

6 OF 21

Issue Date: JANUARY 2015

YYC–SITE–GRID

File Name: yyc-site-grid.dwg Plot Date: Jan 21, 2015 Time: 8:08 AM

YYC™ CALGARY AIRPORT AUTHORITY

PLANNING & ENGINEERING

B

Q

B

T

35R

AIRPO

METIS TRL NE

4200

4000

3800

3600

3400

3200

0000

0200

0400

0600

0800

1000

1200

1400

5604200mN

4000N

3800N

3600N

3400N

3200N

NORTHING

5603025mN

-0070mE

0000m

0200E

0400E

0600E

0800E

1000E

1200E

EASTING

1400E

1530mE

EXAMPLE OF METHOD USED TO GIVE A REFERENCE TO THE NEAREST 50 METRES

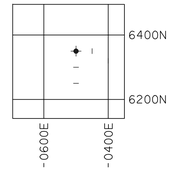

REFERENCE POINT:

GRID LINES ARE AT 200 METRE INCREMENTS

EASTING:
-FOR NEGATIVE NUMBERS, READ NUMBER ON GRID LINE IMMEDIATELY TO THE RIGHT OF POINT.
-ESTIMATE FOURTHS OF A SQUARE FROM THIS LINE WESTWARD FOR NEGATIVE NUMBERS.

-FOR POSITIVE NUMBERS, READ NUMBER ON GRID LINE IMMEDIATELY TO THE LEFT OF POINT.
-ESTIMATE FOURTHS OF A SQUARE FROM THIS LINE EASTWARD FOR POSITIVE NUMBERS.

NORTHING:
-READ NUMBER ON GRID LINE IMMEDIATELY BELOW POINT.
-ESTIMATE FOURTHS OF A SQUARE FROM THIS LINE NORTHWARD.

GRID REFERENCE: -0500E BY 6350N

TO VERBALLY DESCRIBE A LOCATION:

FOR NEGATIVE NUMBERS SAY:
"NEGATIVE ZERO-FIVE-ZERO-ZERO BY SIX-THREE-FIVE-ZERO"

FOR POSITIVE NUMBERS SAY:
"POSITIVE ZERO-FIVE-ZERO-ZERO BY SIX-THREE-FIVE-ZERO"

GRID SHOWN IS BASED ON AN ABBREVIATED FORM OF THE NAD83 3TM SYSTEM USED ON ALL YYC RECORD DRAWINGS.

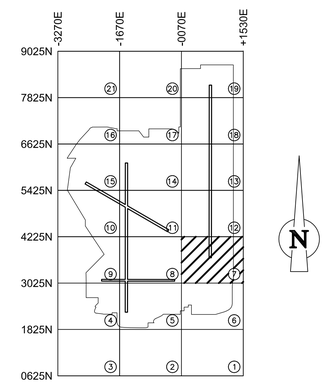

KEY PLAN

Users of this information should verify any/all critical information, systems and dimensions.

Projection: 3 degree Transverse Mercator, Central Meridian 114.
Survey Control: North American Datum, 1983 (NAD83)

Compiled photogammetrically by ATLIS Geomatics Inc.
Date of Aerial photography, July 2014.

Scale 20 0 20 40 60 80 100 180 METRES

CALGARY AIRPORT

Title

SITE GRID PLAN

7 OF 21

Issue Date: JANUARY 2015

YYC-SITE-GRID

Name: yyc-site-grid.dwg Plot Date: Jan 21, 2015 Time: 8:09 AM

YYC™ CALGARY AIRPORT AUTHORITY

PLANNING & ENGINEERING

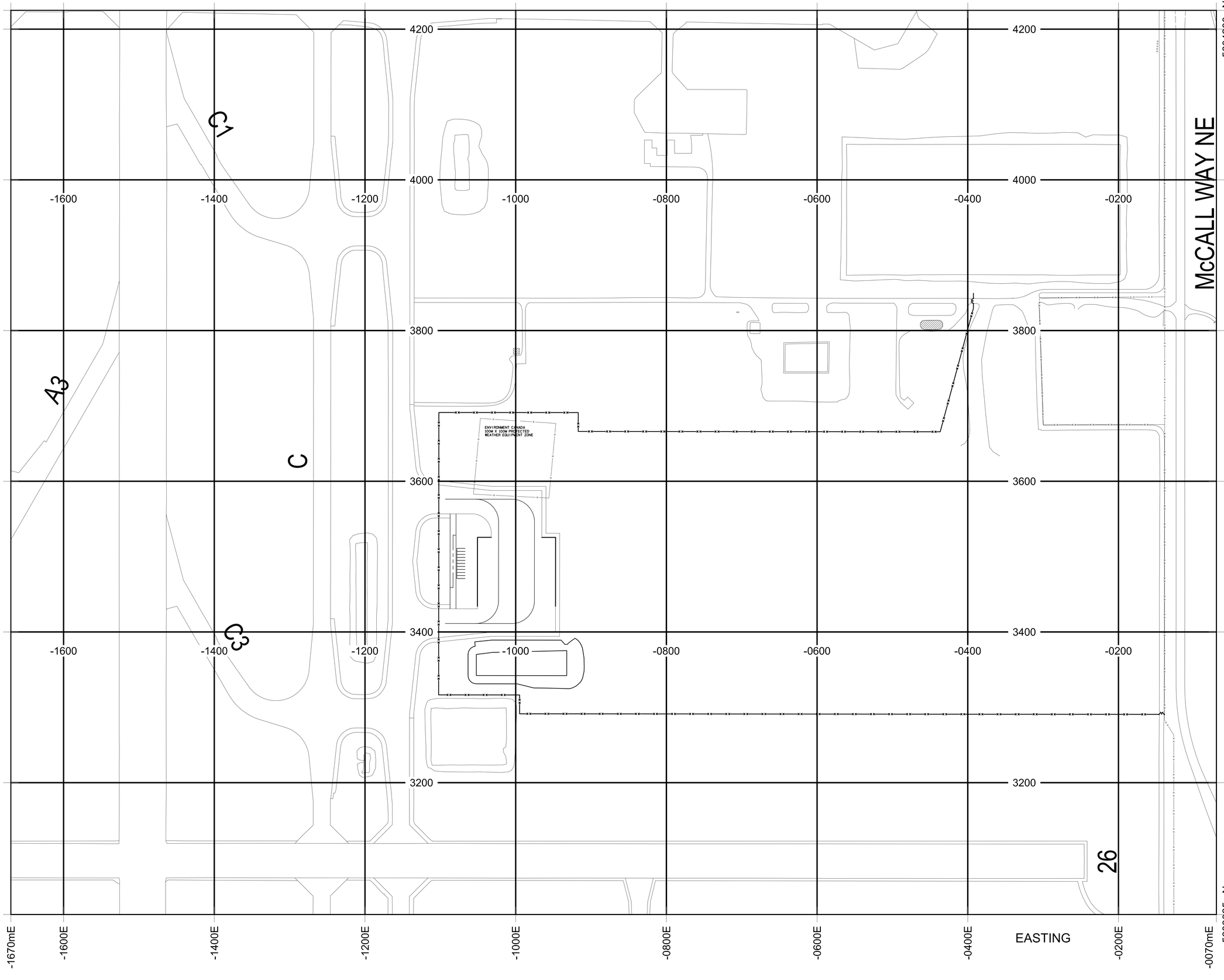

EXAMPLE OF METHOD USED TO GIVE A REFERENCE TO THE NEAREST 50 METRES

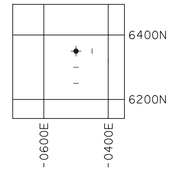

REFERENCE POINT:

GRID LINES ARE AT 200 METRE INCREMENTS

EASTING:
- -FOR NEGATIVE NUMBERS, READ NUMBER ON GRID LINE IMMEDIATELY TO THE RIGHT OF POINT.
- -ESTIMATE FOURTHS OF A SQUARE FROM THIS LINE WESTWARD FOR NEGATIVE NUMBERS.
- -FOR POSITIVE NUMBERS, READ NUMBER ON GRID LINE IMMEDIATELY TO THE LEFT OF POINT.
- -ESTIMATE FOURTHS OF A SQUARE FROM THIS LINE EASTWARD FOR POSITIVE NUMBERS.

NORTHING:
- -READ NUMBER ON GRID LINE IMMEDIATELY BELOW POINT.
- -ESTIMATE FOURTHS OF A SQUARE FROM THIS LINE NORTHWARD.

GRID REFERENCE: -0500E BY 6350N

TO VERBALLY DESCRIBE A LOCATION:

FOR NEGATIVE NUMBERS SAY:
"NEGATIVE ZERO-FIVE-ZERO-ZERO BY SIX-THREE-FIVE-ZERO"

FOR POSITIVE NUMBERS SAY:
"POSITIVE ZERO-FIVE-ZERO-ZERO BY SIX-THREE-FIVE-ZERO"

GRID SHOWN IS BASED ON AN ABBREVIATED FORM OF THE NAD83 3TM SYSTEM USED ON ALL YYC RECORD DRAWINGS.

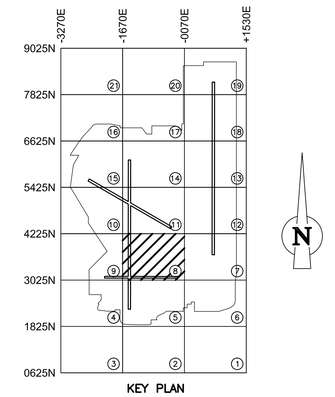

KEY PLAN

Users of this information should verify any/all critical information, systems and dimensions.

Projection: 3 degree Transverse Mercator, Central Meridian 114.
Survey Control: North American Datum, 1983 (NAD83)

Compiled photogammetrically by ATLIS Geomatics Inc.
Date of Aerial photography, July 2014.

Scale 20 0 20 40 60 80 100 180 METRES

CALGARY AIRPORT

Title

SITE GRID PLAN

8 OF 21

Issue Date: JANUARY 2015

YYC–SITE–GRID

Name: yyc-site-grid.dwg Plot Date: Jan 21, 2015 Time: 8:09 AM

YYC™ CALGARY AIRPORT AUTHORITY

PLANNING & ENGINEERING

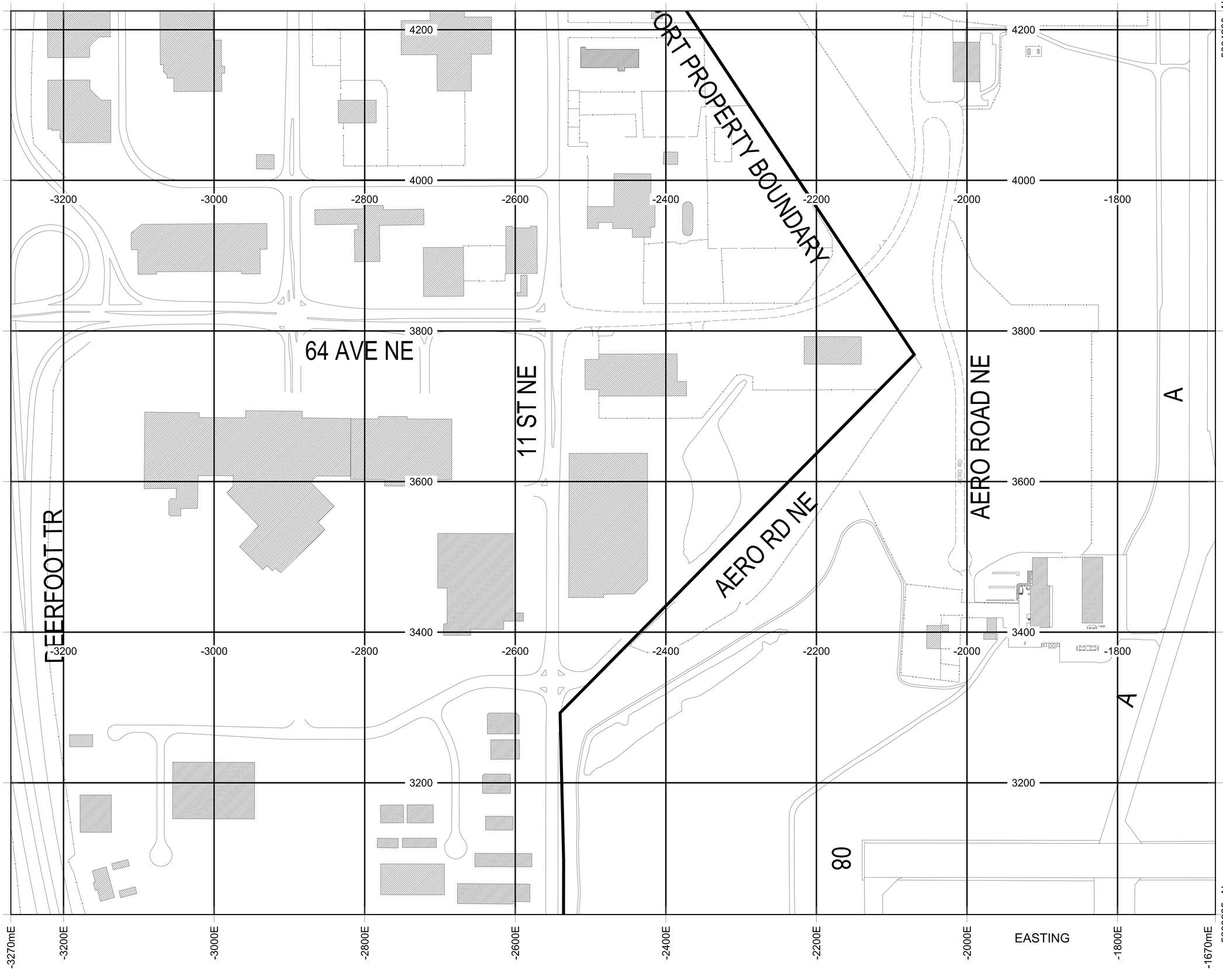

EXAMPLE OF METHOD USED TO GIVE A REFERENCE TO THE NEAREST 50 METRES

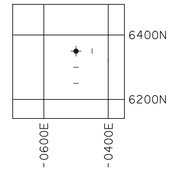

REFERENCE POINT:

GRID LINES ARE AT 200 METRE INCREMENTS

EASTING:
- -FOR NEGATIVE NUMBERS, READ NUMBER ON GRID LINE IMMEDIATELY TO THE RIGHT OF POINT.
- -ESTIMATE FOURTHS OF A SQUARE FROM THIS LINE WESTWARD FOR NEGATIVE NUMBERS.
- -FOR POSITIVE NUMBERS, READ NUMBER ON GRID LINE IMMEDIATELY TO THE LEFT OF POINT.
- -ESTIMATE FOURTHS OF A SQUARE FROM THIS LINE EASTWARD FOR POSITIVE NUMBERS.

NORTHING:
- -READ NUMBER ON GRID LINE IMMEDIATELY BELOW POINT.
- -ESTIMATE FOURTHS OF A SQUARE FROM THIS LINE NORTHWARD.

GRID REFERENCE: -0500E BY 6350N

TO VERBALLY DESCRIBE A LOCATION:

FOR NEGATIVE NUMBERS SAY:
"NEGATIVE ZERO-FIVE-ZERO-ZERO BY SIX-THREE-FIVE-ZERO"

FOR POSITIVE NUMBERS SAY:
"POSITIVE ZERO-FIVE-ZERO-ZERO BY SIX-THREE-FIVE-ZERO"

GRID SHOWN IS BASED ON AN ABBREVIATED FORM OF THE NAD83 3TM SYSTEM USED ON ALL YYC RECORD DRAWINGS.

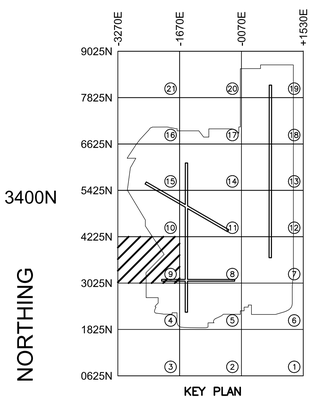

Users of this information should verify any/all critical information, systems and dimensions.

Projection: 3 degree Transverse Mercator, Central Meridian 114.
Survey Control: North American Datum, 1983 (NAD83)

Compiled photogammetrically by ATLIS Geomatics Inc.
Date of Aerial photography, July 2014.

Scale 20 0 20 40 60 80 100 180 METRES

CALGARY AIRPORT

Title

SITE GRID PLAN

9 OF 21

Issue Date: JANUARY 2015

YYC–SITE–GRID

Name: yyc-site-grid.dwg Plot Date: Jan 21, 2015 Time: 8:10 AM

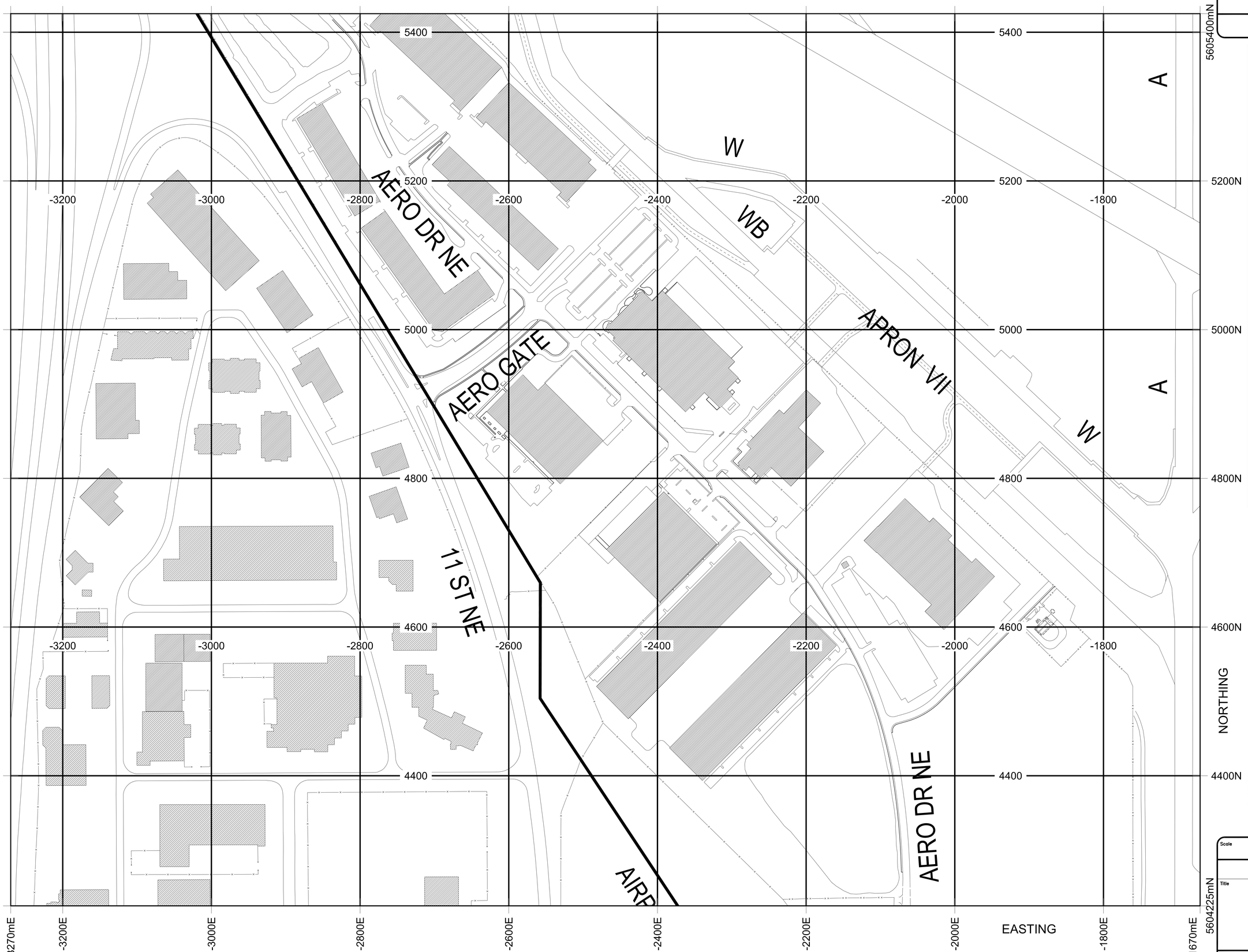

YYC™ CALGARY AIRPORT AUTHORITY

PLANNING & ENGINEERING

EXAMPLE OF METHOD USED TO GIVE A REFERENCE TO THE NEAREST 50 METRES

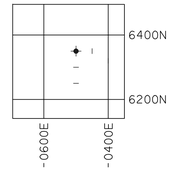

REFERENCE POINT:

GRID LINES ARE AT 200 METRE INCREMENTS

EASTING:
- -FOR NEGATIVE NUMBERS, READ NUMBER ON GRID LINE IMMEDIATELY TO THE RIGHT OF POINT.
- -ESTIMATE FOURTHS OF A SQUARE FROM THIS LINE WESTWARD FOR NEGATIVE NUMBERS.
- -FOR POSITIVE NUMBERS, READ NUMBER ON GRID LINE IMMEDIATELY TO THE LEFT OF POINT.
- -ESTIMATE FOURTHS OF A SQUARE FROM THIS LINE EASTWARD FOR POSITIVE NUMBERS.

NORTHING:
- -READ NUMBER ON GRID LINE IMMEDIATELY BELOW POINT.
- -ESTIMATE FOURTHS OF A SQUARE FROM THIS LINE NORTHWARD.

GRID REFERENCE: -0500E BY 6350N

TO VERBALLY DESCRIBE A LOCATION:

FOR NEGATIVE NUMBERS SAY:
"NEGATIVE ZERO-FIVE-ZERO-ZERO BY SIX-THREE-FIVE-ZERO"

FOR POSITIVE NUMBERS SAY:
"POSITIVE ZERO-FIVE-ZERO-ZERO BY SIX-THREE-FIVE-ZERO"

GRID SHOWN IS BASED ON AN ABBREVIATED FORM OF THE NAD83 3TM SYSTEM USED ON ALL YYC RECORD DRAWINGS.

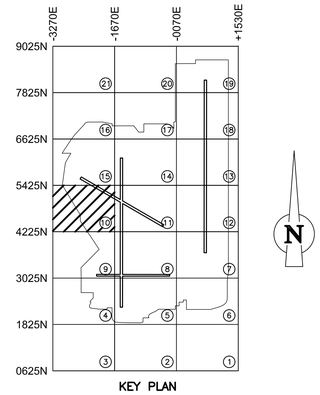

KEY PLAN

Users of this information should verify any/all critical information, systems and dimensions.

Projection: 3 degree Transverse Mercator, Central Meridian 114.
Survey Control: North American Datum, 1983 (NAD83)

Compiled photogammetrically by ATLIS Geomatics Inc.
Date of Aerial photography, July 2014.

Scale 20 0 20 40 60 80 100 180 METRES

CALGARY AIRPORT

Title

SITE GRID PLAN

10 OF 12

Issue Date: JANUARY 2015

YYC–SITE–GRID

Name: yyc-site-grid.dwg Plot Date: Jan 21, 2015 Time: 8:11 AM

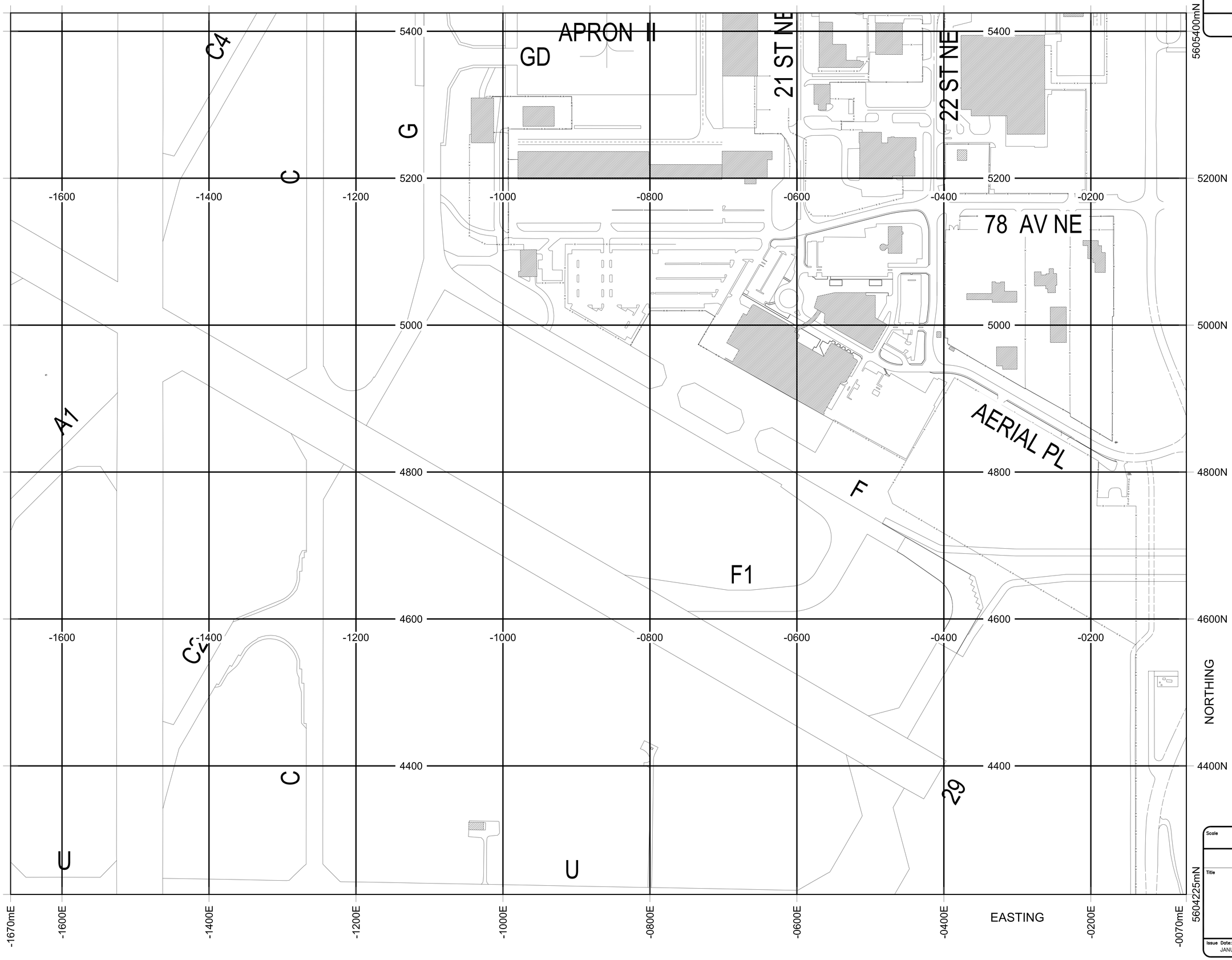

YYC™ CALGARY AIRPORT AUTHORITY

PLANNING & ENGINEERING

EXAMPLE OF METHOD USED TO GIVE A REFERENCE TO THE NEAREST 50 METRES

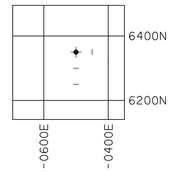

REFERENCE POINT:

GRID LINES ARE AT 200 METRE INCREMENTS

EASTING:
- -FOR NEGATIVE NUMBERS, READ NUMBER ON GRID LINE IMMEDIATELY TO THE RIGHT OF POINT.
- -ESTIMATE FOURTHS OF A SQUARE FROM THIS LINE WESTWARD FOR NEGATIVE NUMBERS.
- -FOR POSITIVE NUMBERS, READ NUMBER ON GRID LINE IMMEDIATELY TO THE LEFT OF POINT.
- -ESTIMATE FOURTHS OF A SQUARE FROM THIS LINE EASTWARD FOR POSITIVE NUMBERS.

NORTHING:
- -READ NUMBER ON GRID LINE IMMEDIATELY BELOW POINT.
- -ESTIMATE FOURTHS OF A SQUARE FROM THIS LINE NORTHWARD.

GRID REFERENCE: -0500E BY 6350N

TO VERBALLY DESCRIBE A LOCATION:

FOR NEGATIVE NUMBERS SAY:
"NEGATIVE ZERO-FIVE-ZERO-ZERO BY SIX-THREE-FIVE-ZERO"

FOR POSITIVE NUMBERS SAY:
"POSITIVE ZERO-FIVE-ZERO-ZERO BY SIX-THREE-FIVE-ZERO"

GRID SHOWN IS BASED ON AN ABBREVIATED FORM OF THE NAD83 3TM SYSTEM USED ON ALL YYC RECORD DRAWINGS.

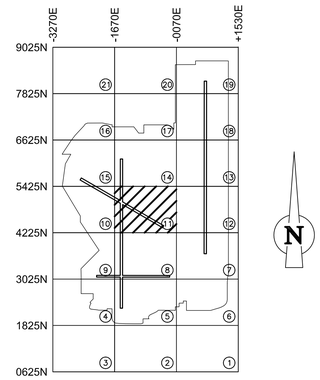

KEY PLAN

Users of this information should verify any/all critical information, systems and dimensions.

Projection: 3 degree Transverse Mercator, Central Meridian 114.
Survey Control: North American Datum, 1983 (NAD83)

Compiled photogammetrically by ATLIS Geomatics Inc.
Date of Aerial photography, July 2014.

Scale 20 0 20 40 60 80 100 180 METRES

CALGARY AIRPORT

Title

SITE GRID PLAN

11 OF 21

Issue Date: JANUARY 2015

YYC–SITE–GRID

Name: yyc-site-grid.dwg Plot Date: Jan 21, 2015 Time: 8:11 AM

YYC™ CALGARY AIRPORT AUTHORITY

PLANNING & ENGINEERING

EXAMPLE OF METHOD USED TO GIVE A REFERENCE TO THE NEAREST 50 METRES

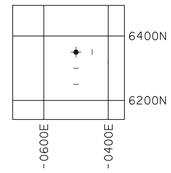

REFERENCE POINT:

GRID LINES ARE AT 200 METRE INCREMENTS

EASTING:
- -FOR NEGATIVE NUMBERS, READ NUMBER ON GRID LINE IMMEDIATELY TO THE RIGHT OF POINT.
- -ESTIMATE FOURTHS OF A SQUARE FROM THIS LINE WESTWARD FOR NEGATIVE NUMBERS.
- -FOR POSITIVE NUMBERS, READ NUMBER ON GRID LINE IMMEDIATELY TO THE LEFT OF POINT.
- -ESTIMATE FOURTHS OF A SQUARE FROM THIS LINE EASTWARD FOR POSITIVE NUMBERS.

NORTHING:
- -READ NUMBER ON GRID LINE IMMEDIATELY BELOW POINT.
- -ESTIMATE FOURTHS OF A SQUARE FROM THIS LINE NORTHWARD.

GRID REFERENCE: -0500E BY 6350N

TO VERBALLY DESCRIBE A LOCATION:

FOR NEGATIVE NUMBERS SAY:
"NEGATIVE ZERO-FIVE-ZERO-ZERO BY SIX-THREE-FIVE-ZERO"

FOR POSITIVE NUMBERS SAY:
"POSITIVE ZERO-FIVE-ZERO-ZERO BY SIX-THREE-FIVE-ZERO"

GRID SHOWN IS BASED ON AN ABBREVIATED FORM OF THE NAD83 3TM SYSTEM USED ON ALL YYC RECORD DRAWINGS.

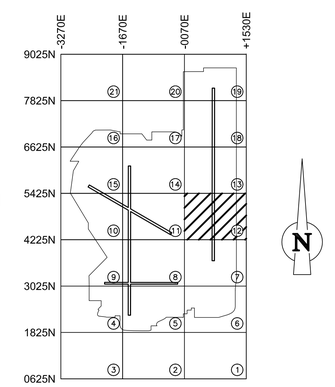

KEY PLAN

Users of this information should verify any/all critical information, systems and dimensions.

Projection: 3 degree Transverse Mercator, Central Meridian 114.
Survey Control: North American Datum, 1983 (NAD83)

Compiled photogammetrically by ATLIS Geomatics Inc.
Date of Aerial photography, July 2014.

Scale 20 0 20 40 60 80 100 180 METRES

CALGARY AIRPORT

Title

SITE GRID PLAN

12 OF 21

Issue Date: JANUARY 2015

YYC–SITE–GRID

Name: yyc-site-grid.dwg Plot Date: Jan 21, 2015 Time: 8:12 AM

YYC™ CALGARY AIRPORT AUTHORITY

PLANNING & ENGINEERING

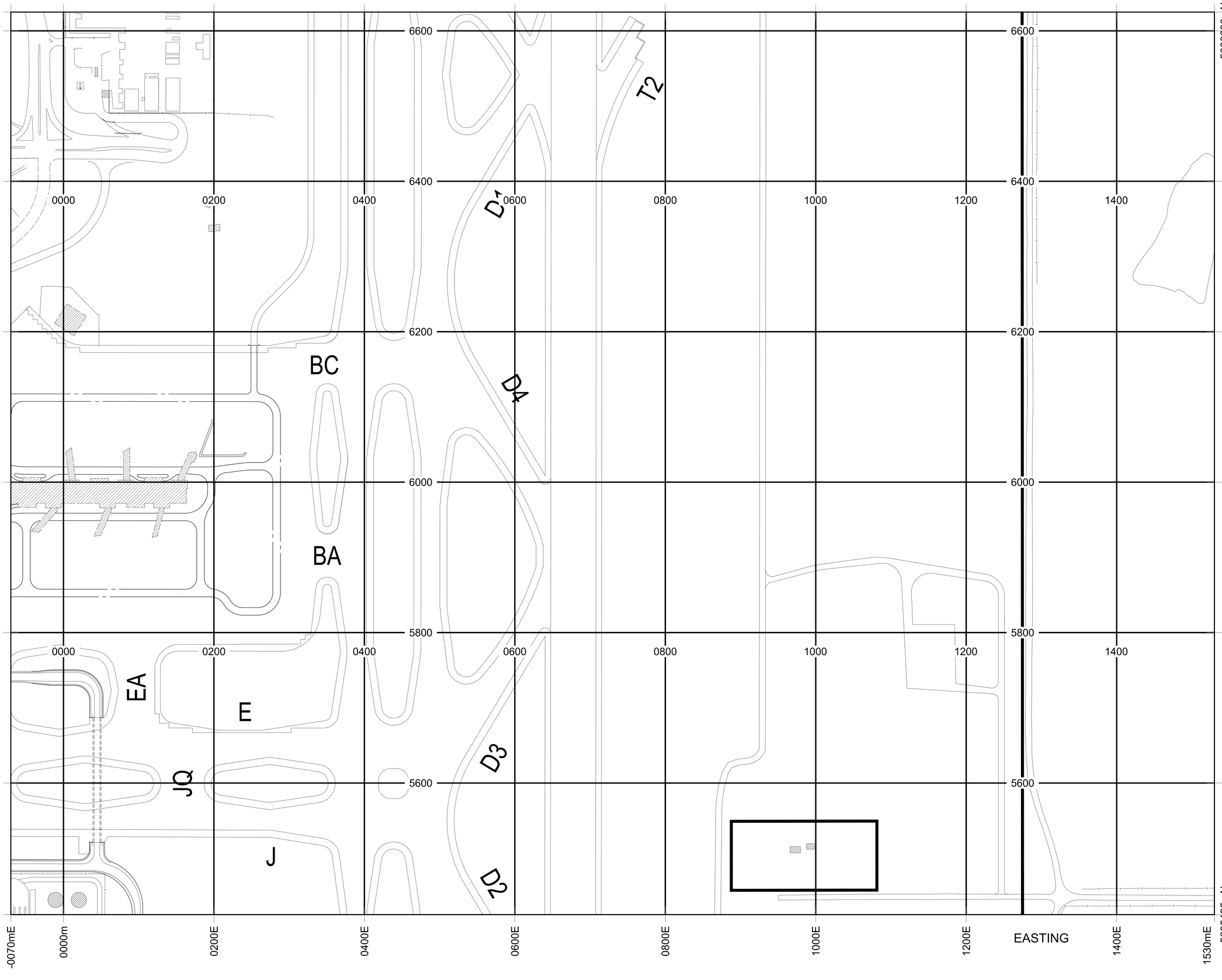

EXAMPLE OF METHOD USED TO GIVE A REFERENCE TO THE NEAREST 50 METRES

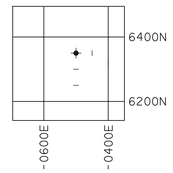

REFERENCE POINT:

GRID LINES ARE AT 200 METRE INCREMENTS

EASTING:
- -FOR NEGATIVE NUMBERS, READ NUMBER ON GRID LINE IMMEDIATELY TO THE RIGHT OF POINT.
- -ESTIMATE FOURTHS OF A SQUARE FROM THIS LINE WESTWARD FOR NEGATIVE NUMBERS.
- -FOR POSITIVE NUMBERS, READ NUMBER ON GRID LINE IMMEDIATELY TO THE LEFT OF POINT.
- -ESTIMATE FOURTHS OF A SQUARE FROM THIS LINE EASTWARD FOR POSITIVE NUMBERS.

NORTHING:
- -READ NUMBER ON GRID LINE IMMEDIATELY BELOW POINT.
- -ESTIMATE FOURTHS OF A SQUARE FROM THIS LINE NORTHWARD.

GRID REFERENCE: -0500E BY 6350N

TO VERBALLY DESCRIBE A LOCATION:

FOR NEGATIVE NUMBERS SAY:
"NEGATIVE ZERO-FIVE-ZERO-ZERO BY SIX-THREE-FIVE-ZERO"

FOR POSITIVE NUMBERS SAY:
"POSITIVE ZERO-FIVE-ZERO-ZERO BY SIX-THREE-FIVE-ZERO"

GRID SHOWN IS BASED ON AN ABBREVIATED FORM OF THE NAD83 3TM SYSTEM USED ON ALL YYC RECORD DRAWINGS.

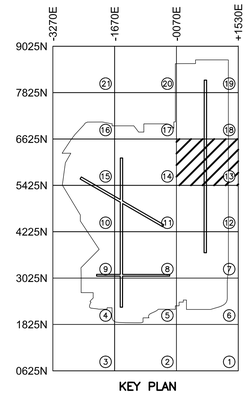

KEY PLAN

Users of this information should verify any/all critical information, systems and dimensions.

Projection: 3 degree Transverse Mercator, Central Meridian 114.
Survey Control: North American Datum, 1983 (NAD83)

Compiled photogammetricaly by ATLIS Geomatics Inc.
Date of Aerial photography, July 2014.

Scale 20 0 20 40 60 80 100 180 METRES

CALGARY AIRPORT

Title

SITE GRID PLAN

13 OF 21

Issue Date: JANUARY 2015

YYC–SITE–GRID

Name: yyc-site-grid.dwg Plot Date: Jan 21, 2015 Time: 8:12 AM

YYC™ CALGARY AIRPORT AUTHORITY

PLANNING & ENGINEERING

EXAMPLE OF METHOD USED TO GIVE A REFERENCE TO THE NEAREST 50 METRES

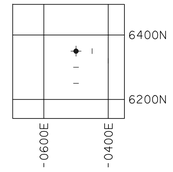

REFERENCE POINT:

GRID LINES ARE AT 200 METRE INCREMENTS

EASTING:
- -FOR NEGATIVE NUMBERS, READ NUMBER ON GRID LINE IMMEDIATELY TO THE RIGHT OF POINT.
- -ESTIMATE FOURTHS OF A SQUARE FROM THIS LINE WESTWARD FOR NEGATIVE NUMBERS.
- -FOR POSITIVE NUMBERS, READ NUMBER ON GRID LINE IMMEDIATELY TO THE LEFT OF POINT.
- -ESTIMATE FOURTHS OF A SQUARE FROM THIS LINE EASTWARD FOR POSITIVE NUMBERS.

NORTHING:
- -READ NUMBER ON GRID LINE IMMEDIATELY BELOW POINT.
- -ESTIMATE FOURTHS OF A SQUARE FROM THIS LINE NORTHWARD.

GRID REFERENCE: -0500E BY 6350N

TO VERBALLY DESCRIBE A LOCATION:

FOR NEGATIVE NUMBERS SAY:
"NEGATIVE ZERO-FIVE-ZERO-ZERO BY SIX-THREE-FIVE-ZERO"

FOR POSITIVE NUMBERS SAY:
"POSITIVE ZERO-FIVE-ZERO-ZERO BY SIX-THREE-FIVE-ZERO"

GRID SHOWN IS BASED ON AN ABBREVIATED FORM OF THE NAD83 3TM SYSTEM USED ON ALL YYC RECORD DRAWINGS.

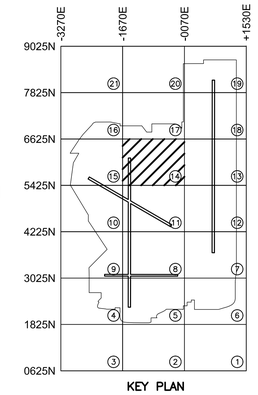

KEY PLAN

Users of this information should verify any/all critical information, systems and dimensions.

Projection: 3 degree Transverse Mercator, Central Meridian 114.
Survey Control: North American Datum, 1983 (NAD83)

Compiled photogammetrically by ATLIS Geomatics Inc.
Date of Aerial photography, July 2014.

Scale 20 0 20 40 60 80 100 180 METRES

CALGARY AIRPORT

Title

SITE GRID PLAN

14 OF 21

Issue Date: JANUARY 2015

YYC–SITE–GRID

Name: yyc-site-grid.dwg Plot Date: Jan 21, 2015 Time: 8:13 AM

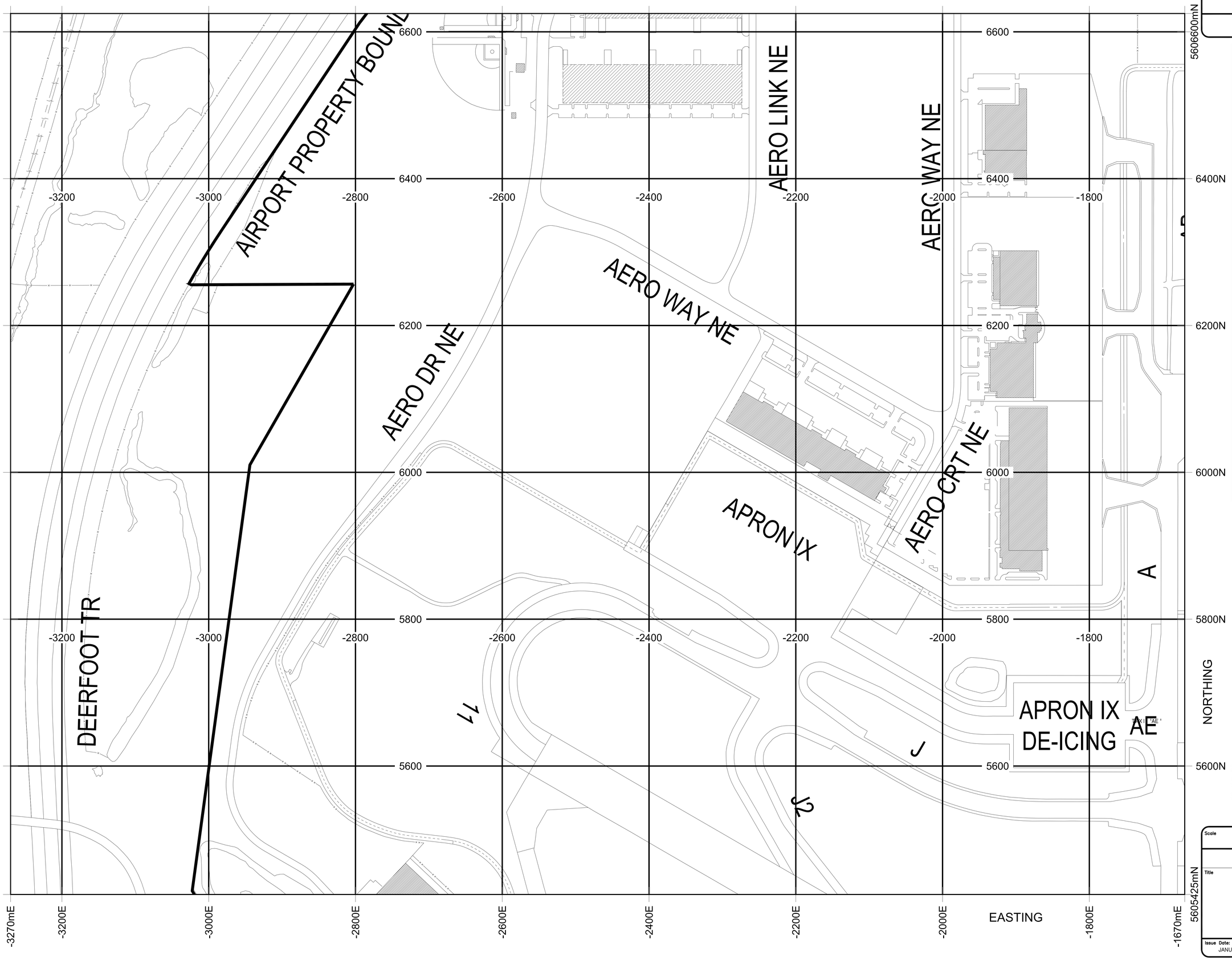

YYC™ CALGARY AIRPORT AUTHORITY

PLANNING & ENGINEERING

EXAMPLE OF METHOD USED TO GIVE A REFERENCE TO THE NEAREST 50 METRES

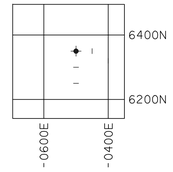

REFERENCE POINT:

GRID LINES ARE AT 200 METRE INCREMENTS

EASTING:
- -FOR NEGATIVE NUMBERS, READ NUMBER ON GRID LINE IMMEDIATELY TO THE RIGHT OF POINT.
- -ESTIMATE FOURTHS OF A SQUARE FROM THIS LINE WESTWARD FOR NEGATIVE NUMBERS.
- -FOR POSITIVE NUMBERS, READ NUMBER ON GRID LINE IMMEDIATELY TO THE LEFT OF POINT.
- -ESTIMATE FOURTHS OF A SQUARE FROM THIS LINE EASTWARD FOR POSITIVE NUMBERS.

NORTHING:
- -READ NUMBER ON GRID LINE IMMEDIATELY BELOW POINT.
- -ESTIMATE FOURTHS OF A SQUARE FROM THIS LINE NORTHWARD.

GRID REFERENCE: -0500E BY 6350N

TO VERBALLY DESCRIBE A LOCATION:

FOR NEGATIVE NUMBERS SAY:
"NEGATIVE ZERO-FIVE-ZERO-ZERO BY SIX-THREE-FIVE-ZERO"

FOR POSITIVE NUMBERS SAY:
"POSITIVE ZERO-FIVE-ZERO-ZERO BY SIX-THREE-FIVE-ZERO"

GRID SHOWN IS BASED ON AN ABBREVIATED FORM OF THE NAD83 3TM SYSTEM USED ON ALL YYC RECORD DRAWINGS.

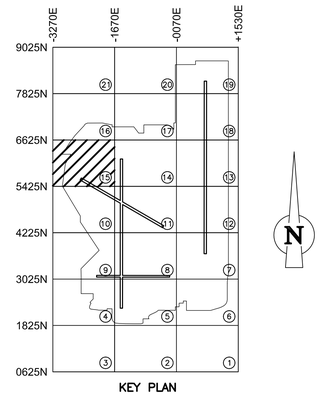

KEY PLAN

Users of this information should verify any/all critical information, systems and dimensions.

Projection: 3 degree Transverse Mercator, Central Meridian 114.
Survey Control: North American Datum, 1983 (NAD83)

Compiled photogammetrically by ATLIS Geomatics Inc.
Date of Aerial photography, July 2014.

Scale 20 0 20 40 60 80 100 180 METRES

CALGARY AIRPORT

Title

SITE GRID PLAN

15 OF 21

Issue Date: JANUARY 2015

YYC–SITE–GRID

Name: yyc-site-grid.dwg Plot Date: Jan 21, 2015 Time: 8:13 AM

YYC™ CALGARY AIRPORT AUTHORITY

PLANNING & ENGINEERING

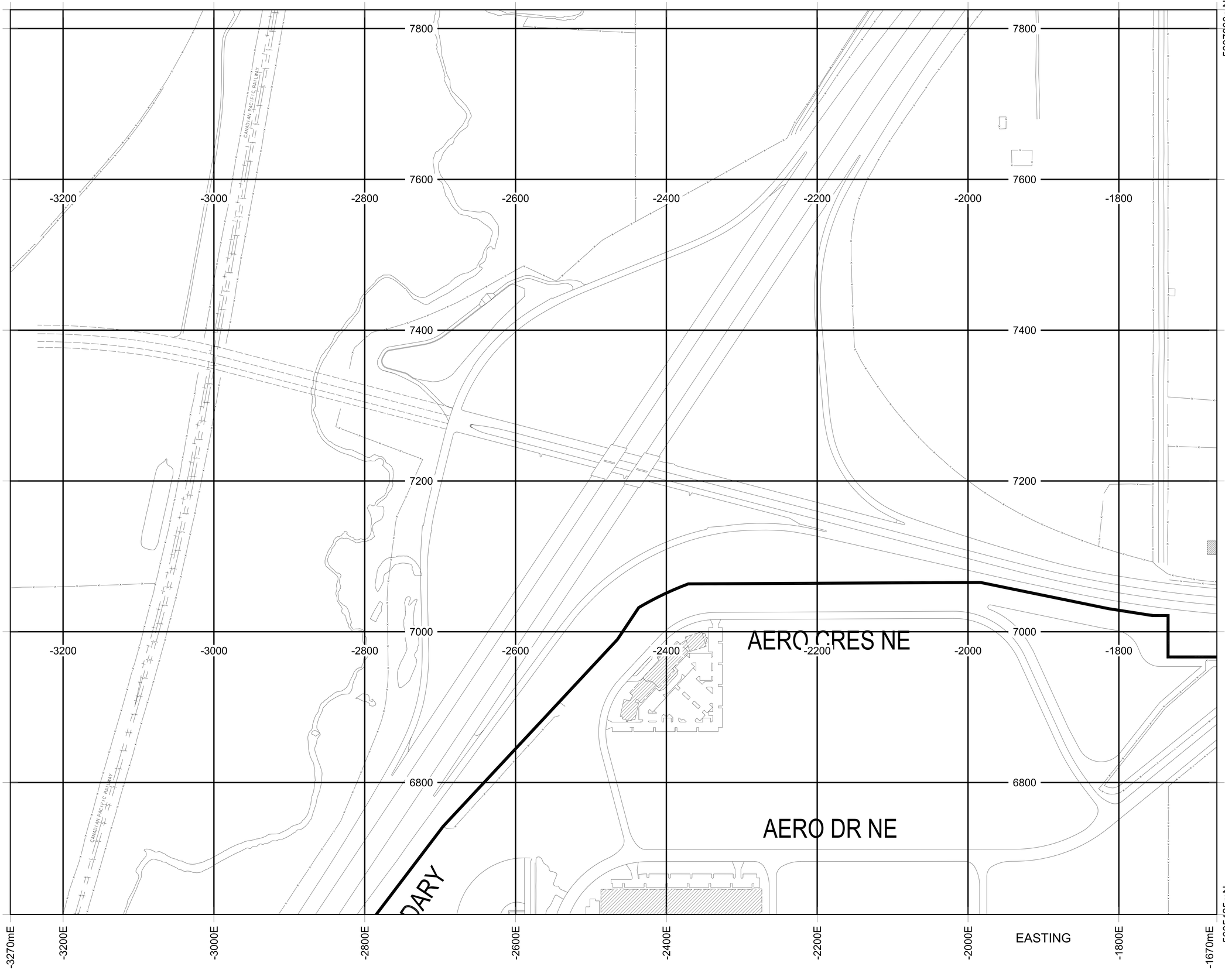

EXAMPLE OF METHOD USED TO GIVE A REFERENCE TO THE NEAREST 50 METRES

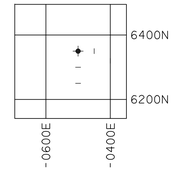

REFERENCE POINT:

GRID LINES ARE AT 200 METRE INCREMENTS

EASTING:
- -FOR NEGATIVE NUMBERS, READ NUMBER ON GRID LINE IMMEDIATELY TO THE RIGHT OF POINT.
- -ESTIMATE FOURTHS OF A SQUARE FROM THIS LINE WESTWARD FOR NEGATIVE NUMBERS.
- -FOR POSITIVE NUMBERS, READ NUMBER ON GRID LINE IMMEDIATELY TO THE LEFT OF POINT.
- -ESTIMATE FOURTHS OF A SQUARE FROM THIS LINE EASTWARD FOR POSITIVE NUMBERS.

NORTHING:
- -READ NUMBER ON GRID LINE IMMEDIATELY BELOW POINT.
- -ESTIMATE FOURTHS OF A SQUARE FROM THIS LINE NORTHWARD.

GRID REFERENCE: -0500E BY 6350N

TO VERBALLY DESCRIBE A LOCATION:

FOR NEGATIVE NUMBERS SAY:
"NEGATIVE ZERO-FIVE-ZERO-ZERO BY SIX-THREE-FIVE-ZERO"

FOR POSITIVE NUMBERS SAY:
"POSITIVE ZERO-FIVE-ZERO-ZERO BY SIX-THREE-FIVE-ZERO"

GRID SHOWN IS BASED ON AN ABBREVIATED FORM OF THE NAD83 3TM SYSTEM USED ON ALL YYC RECORD DRAWINGS.

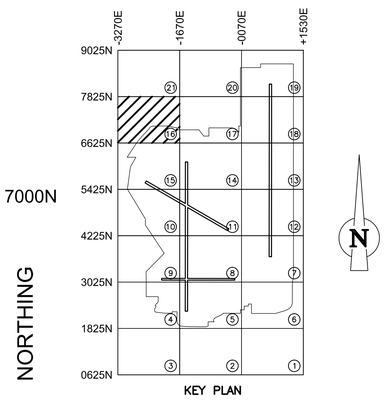

Users of this information should verify any/all critical information, systems and dimensions.

Projection: 3 degree Transverse Mercator, Central Meridian 114.
Survey Control: North American Datum, 1983 (NAD83)

Compiled photogammetrically by ATUS Geomatics Inc.
Date of Aerial photography, July 2014.

Scale 20 0 20 40 60 80 100 180 METRES

CALGARY AIRPORT

Title

SITE GRID PLAN

16 OF 21

Issue Date: JANUARY 2015

YYC–SITE–GRID

Model: yyc-site-grid.dgn Plot Date: Jan 21 2015, Time: 8:18 AM

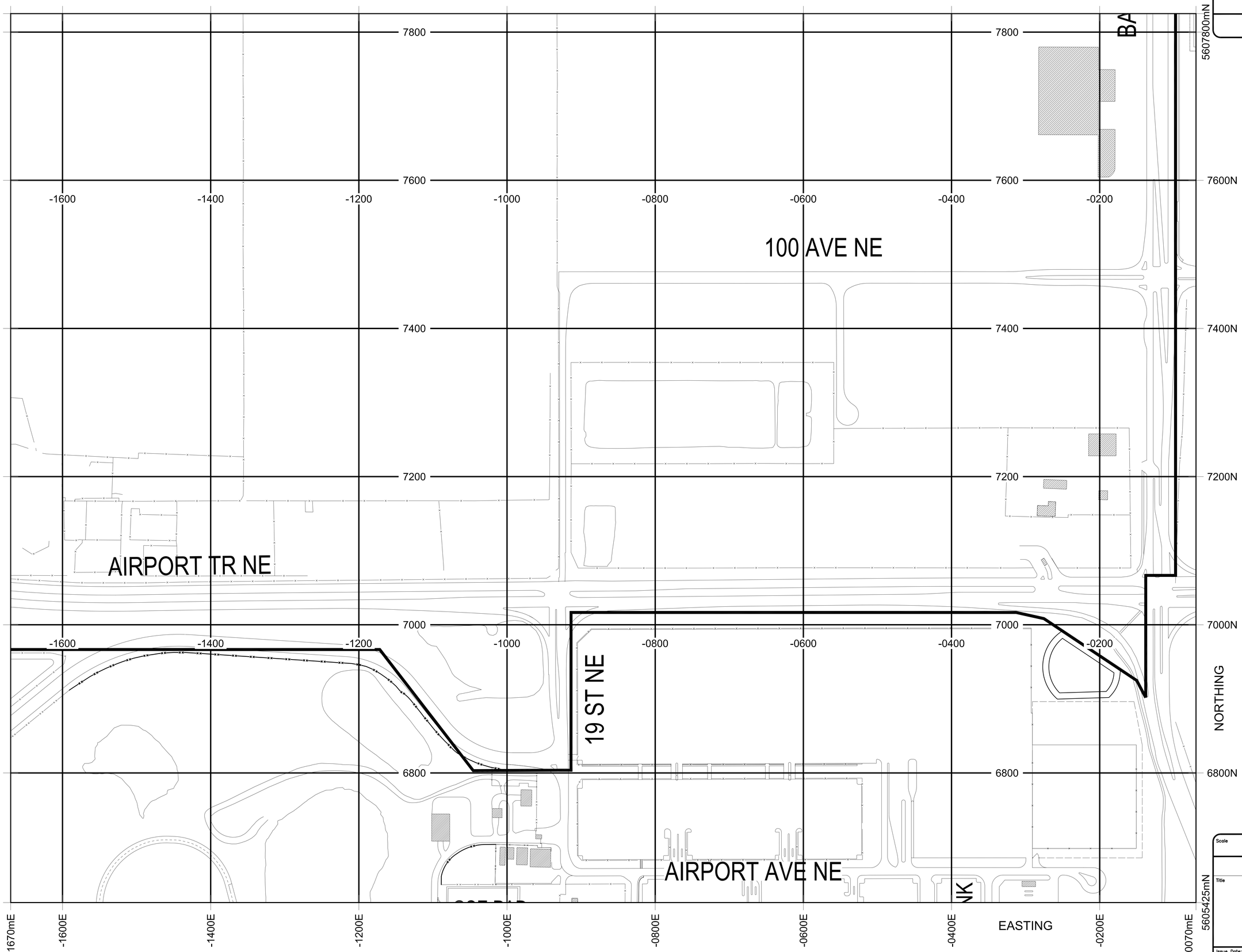

YYC™ CALGARY AIRPORT AUTHORITY

PLANNING & ENGINEERING

EXAMPLE OF METHOD USED TO GIVE A REFERENCE TO THE NEAREST 50 METRES

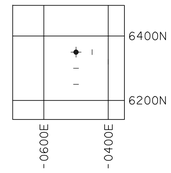

REFERENCE POINT:

GRID LINES ARE AT 200 METRE INCREMENTS

EASTING:
- -FOR NEGATIVE NUMBERS, READ NUMBER ON GRID LINE IMMEDIATELY TO THE RIGHT OF POINT.
- -ESTIMATE FOURTHS OF A SQUARE FROM THIS LINE WESTWARD FOR NEGATIVE NUMBERS.
- -FOR POSITIVE NUMBERS, READ NUMBER ON GRID LINE IMMEDIATELY TO THE LEFT OF POINT.
- -ESTIMATE FOURTHS OF A SQUARE FROM THIS LINE EASTWARD FOR POSITIVE NUMBERS.

NORTHING:
- -READ NUMBER ON GRID LINE IMMEDIATELY BELOW POINT.
- -ESTIMATE FOURTHS OF A SQUARE FROM THIS LINE NORTHWARD.

GRID REFERENCE: -0500E BY 6350N

TO VERBALLY DESCRIBE A LOCATION:

FOR NEGATIVE NUMBERS SAY:
"NEGATIVE ZERO-FIVE-ZERO-ZERO BY SIX-THREE-FIVE-ZERO"

FOR POSITIVE NUMBERS SAY:
"POSITIVE ZERO-FIVE-ZERO-ZERO BY SIX-THREE-FIVE-ZERO"

GRID SHOWN IS BASED ON AN ABBREVIATED FORM OF THE NAD83 3TM SYSTEM USED ON ALL YYC RECORD DRAWINGS.

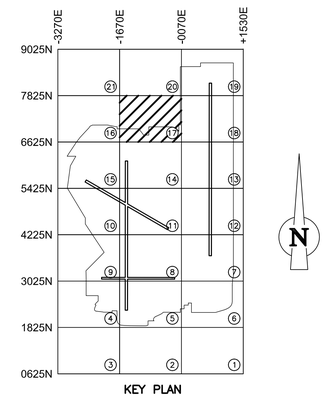

KEY PLAN

Users of this information should verify any/all critical information, systems and dimensions.

Projection: 3 degree Transverse Mercator, Central Meridian 114.
Survey Control: North American Datum, 1983 (NAD83)

Compiled photogammetrically by ATLIS Geomatics Inc.
Date of Aerial photography, July 2014.

Scale 20 0 20 40 60 80 100 180 METRES

CALGARY AIRPORT

Title

SITE GRID PLAN

17 OF 21

Issue Date: JANUARY 2015

YYC–SITE–GRID

Name: yyc-site-grid.dwg Plot Date: Jan 21, 2015 Time: 8:14 AM

YYC™ CALGARY AIRPORT AUTHORITY

PLANNING & ENGINEERING

25 ST NE

36 ST NE

D

B

D6

D6

7800

7600

7400

7200

7000

6800

0000

0200

0400

0600

0800

1000

1200

1400

5607800mN

7600N

7400N

7200N

7000N

6800N

5605425mN

-0070mE

0000m

0200E

0400E

0600E

0800E

1000E

1200E

1400E

1530mE

EASTING

NORTHING

EXAMPLE OF METHOD USED TO GIVE A REFERENCE TO THE NEAREST 50 METRES

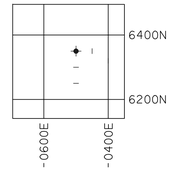

REFERENCE POINT:

GRID LINES ARE AT 200 METRE INCREMENTS

EASTING:
- -FOR NEGATIVE NUMBERS, READ NUMBER ON GRID LINE IMMEDIATELY TO THE RIGHT OF POINT.
- -ESTIMATE FOURTHS OF A SQUARE FROM THIS LINE WESTWARD FOR NEGATIVE NUMBERS.
- -FOR POSITIVE NUMBERS, READ NUMBER ON GRID LINE IMMEDIATELY TO THE LEFT OF POINT.
- -ESTIMATE FOURTHS OF A SQUARE FROM THIS LINE EASTWARD FOR POSITIVE NUMBERS.

NORTHING:
- -READ NUMBER ON GRID LINE IMMEDIATELY BELOW POINT.
- -ESTIMATE FOURTHS OF A SQUARE FROM THIS LINE NORTHWARD.

GRID REFERENCE: -0500E BY 6350N

TO VERBALLY DESCRIBE A LOCATION:

FOR NEGATIVE NUMBERS SAY:
"NEGATIVE ZERO-FIVE-ZERO-ZERO BY SIX-THREE-FIVE-ZERO"

FOR POSITIVE NUMBERS SAY:
"POSITIVE ZERO-FIVE-ZERO-ZERO BY SIX-THREE-FIVE-ZERO"

GRID SHOWN IS BASED ON AN ABBREVIATED FORM OF THE NAD83 3TM SYSTEM USED ON ALL YYC RECORD DRAWINGS.

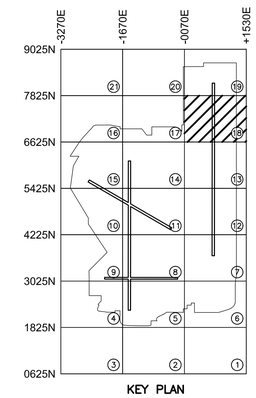

KEY PLAN

Users of this information should verify any/all critical information, systems and dimensions.

Projection: 3 degree Transverse Mercator, Central Meridian 114.
Survey Control: North American Datum, 1983 (NAD83)

Compiled photogammetrically by ATLIS Geomatics Inc.
Date of Aerial photography, July 2014.

Scale 20 0 20 40 60 80 100 180 METRES

CALGARY AIRPORT

Title

SITE GRID PLAN

18 OF 21

Issue Date: JANUARY 2015

YYC–SITE–GRID

Name: YYC-site-grid.dwg Plot Date: Jan 21, 2015 Time: 8:14 AM

YYC™ CALGARY AIRPORT AUTHORITY

PLANNING & ENGINEERING

EXAMPLE OF METHOD USED TO GIVE A REFERENCE TO THE NEAREST 50 METRES

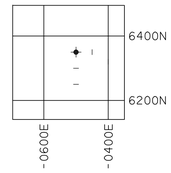

REFERENCE POINT:

GRID LINES ARE AT 200 METRE INCREMENTS

EASTING:
- -FOR NEGATIVE NUMBERS, READ NUMBER ON GRID LINE IMMEDIATELY TO THE RIGHT OF POINT.
- -ESTIMATE FOURTHS OF A SQUARE FROM THIS LINE WESTWARD FOR NEGATIVE NUMBERS.
- -FOR POSITIVE NUMBERS, READ NUMBER ON GRID LINE IMMEDIATELY TO THE LEFT OF POINT.
- -ESTIMATE FOURTHS OF A SQUARE FROM THIS LINE EASTWARD FOR POSITIVE NUMBERS.

NORTHING:
- -READ NUMBER ON GRID LINE IMMEDIATELY BELOW POINT.
- -ESTIMATE FOURTHS OF A SQUARE FROM THIS LINE NORTHWARD.

GRID REFERENCE: -0500E BY 6350N

TO VERBALLY DESCRIBE A LOCATION:

FOR NEGATIVE NUMBERS SAY:
"NEGATIVE ZERO-FIVE-ZERO-ZERO BY SIX-THREE-FIVE-ZERO"

FOR POSITIVE NUMBERS SAY:
"POSITIVE ZERO-FIVE-ZERO-ZERO BY SIX-THREE-FIVE-ZERO"

GRID SHOWN IS BASED ON AN ABBREVIATED FORM OF THE NAD83 3TM SYSTEM USED ON ALL YYC RECORD DRAWINGS.

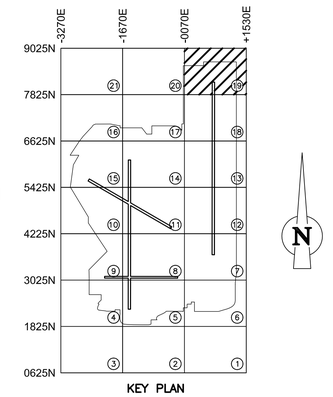

KEY PLAN

Users of this information should verify any/all critical information, systems and dimensions.

Projection: 3 degree Transverse Mercator, Central Meridian 114.
Survey Control: North American Datum, 1983 (NAD83)

Compiled photogammetrically by ATLIS Geomatics Inc.
Date of Aerial photography, July 2014.

Scale 20 0 20 40 60 80 100 180 METRES

CALGARY AIRPORT

Title

SITE GRID PLAN

19 OF 21

Issue Date: JANUARY 2015

YYC–SITE–GRID

Name: yyc-site-grid.dwg Plot Date: Jan 21, 2015 Time: 8:15 AM

YYC™ CALGARY AIRPORT AUTHORITY

PLANNING & ENGINEERING

COUNTRY HILLS BLVD NE

FREEPORT BLVD NE

EERFOOT TR

ARLOW TR

9000 8800 8600 8400 8200 8000

-1600 -1400 -1200 -1000 -0800 -0600 -0400 -0200

5609000mN 8800N 8600N 8400N 8200N 8000N

-1670mE -1600E -1400E -1200E -1000E -0800E -0600E -0400E -0200E -0070mE

5607825mN

EASTING

NORTHING

EXAMPLE OF METHOD USED TO GIVE A REFERENCE TO THE NEAREST 50 METRES

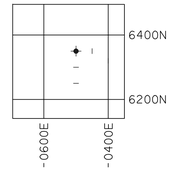

REFERENCE POINT:

GRID LINES ARE AT 200 METRE INCREMENTS

EASTING:
- -FOR NEGATIVE NUMBERS, READ NUMBER ON GRID LINE IMMEDIATELY TO THE RIGHT OF POINT.
- -ESTIMATE FOURTHS OF A SQUARE FROM THIS LINE WESTWARD FOR NEGATIVE NUMBERS.
- -FOR POSITIVE NUMBERS, READ NUMBER ON GRID LINE IMMEDIATELY TO THE LEFT OF POINT.
- -ESTIMATE FOURTHS OF A SQUARE FROM THIS LINE EASTWARD FOR POSITIVE NUMBERS.

NORTHING:
- -READ NUMBER ON GRID LINE IMMEDIATELY BELOW POINT.
- -ESTIMATE FOURTHS OF A SQUARE FROM THIS LINE NORTHWARD.

GRID REFERENCE: -0500E BY 6350N

TO VERBALLY DESCRIBE A LOCATION:

FOR NEGATIVE NUMBERS SAY:
"NEGATIVE ZERO-FIVE-ZERO-ZERO BY SIX-THREE-FIVE-ZERO"

FOR POSITIVE NUMBERS SAY:
"POSITIVE ZERO-FIVE-ZERO-ZERO BY SIX-THREE-FIVE-ZERO"

GRID SHOWN IS BASED ON AN ABBREVIATED FORM OF THE NAD83 3TM SYSTEM USED ON ALL YYC RECORD DRAWINGS.

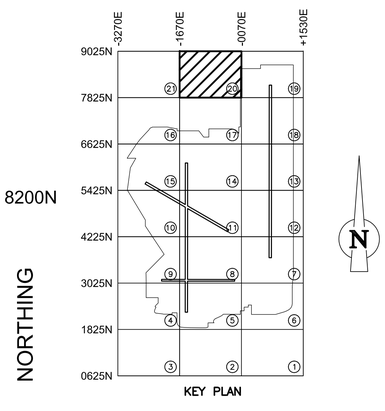

KEY PLAN

Users of this information should verify any/all critical information, systems and dimensions.

Projection: 3 degree Transverse Mercator, Central Meridian 114.
Survey Control: North American Datum, 1983 (NAD83)

Compiled photogammetrically by ATLIS Geomatics Inc.
Date of Aerial photography, July 2014.

Scale 20 0 20 40 60 80 100 180 METRES

CALGARY AIRPORT

Title

SITE GRID PLAN

20 OF 21

Issue Date: JANUARY 2015

YYC–SITE–GRID

Name: yyc-site-grid.dwg Plot Date: Jan 21, 2015 Time: 8:15 AM

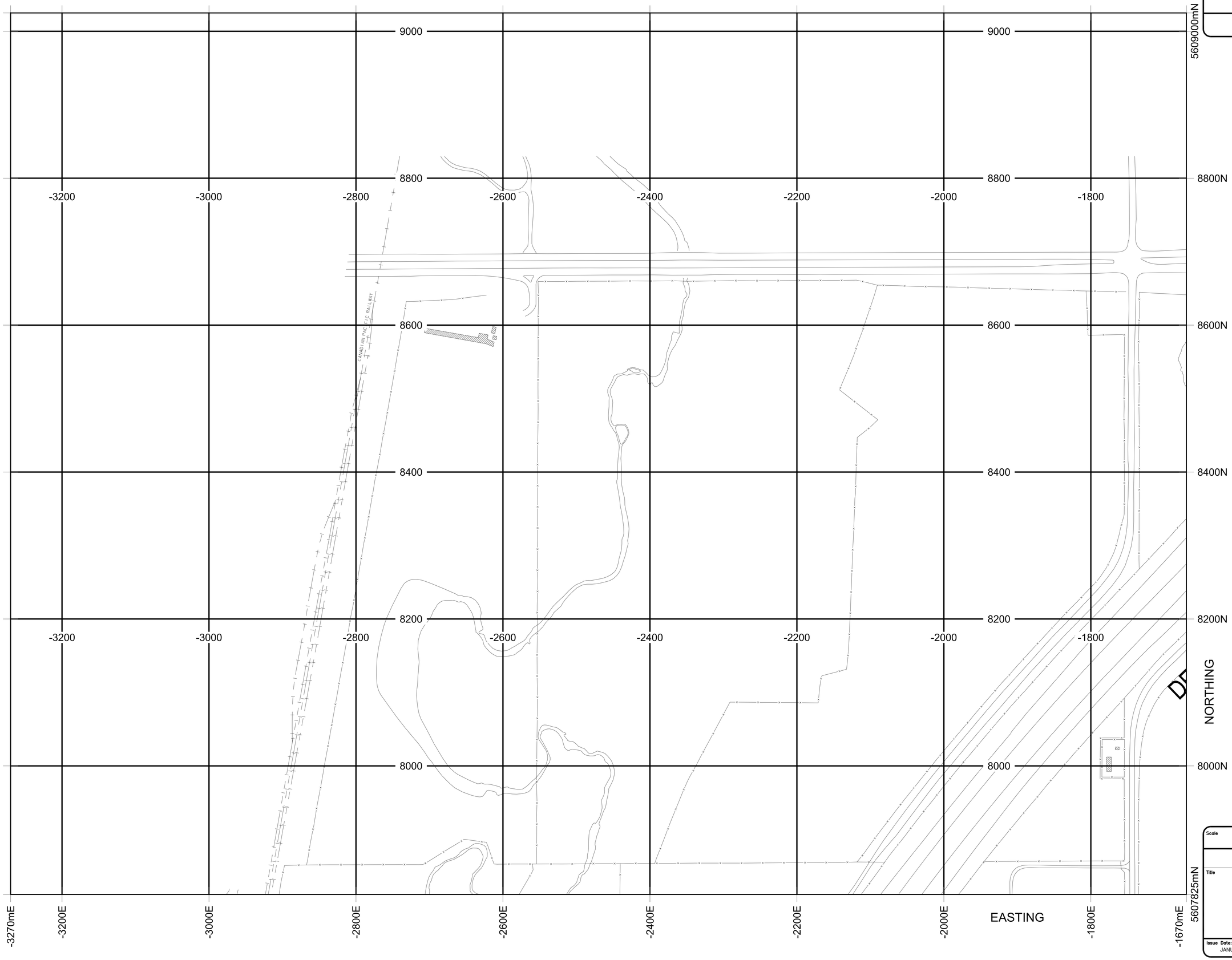

YYC™ CALGARY AIRPORT AUTHORITY

PLANNING & ENGINEERING

EXAMPLE OF METHOD USED TO GIVE A REFERENCE TO THE NEAREST 50 METRES

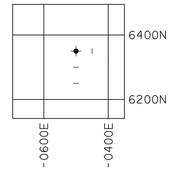

REFERENCE POINT:

GRID LINES ARE AT 200 METRE INCREMENTS

EASTING:
- -FOR NEGATIVE NUMBERS, READ NUMBER ON GRID LINE IMMEDIATELY TO THE RIGHT OF POINT.
- -ESTIMATE FOURTHS OF A SQUARE FROM THIS LINE WESTWARD FOR NEGATIVE NUMBERS.
- -FOR POSITIVE NUMBERS, READ NUMBER ON GRID LINE IMMEDIATELY TO THE LEFT OF POINT.
- -ESTIMATE FOURTHS OF A SQUARE FROM THIS LINE EASTWARD FOR POSITIVE NUMBERS.

NORTHING:
- -READ NUMBER ON GRID LINE IMMEDIATELY BELOW POINT.
- -ESTIMATE FOURTHS OF A SQUARE FROM THIS LINE NORTHWARD.

GRID REFERENCE: -0500E BY 6350N

TO VERBALLY DESCRIBE A LOCATION:

FOR NEGATIVE NUMBERS SAY:
"NEGATIVE ZERO-FIVE-ZERO-ZERO BY SIX-THREE-FIVE-ZERO"

FOR POSITIVE NUMBERS SAY:
"POSITIVE ZERO-FIVE-ZERO-ZERO BY SIX-THREE-FIVE-ZERO"

GRID SHOWN IS BASED ON AN ABBREVIATED FORM OF THE NAD83 3TM SYSTEM USED ON ALL YYC RECORD DRAWINGS.

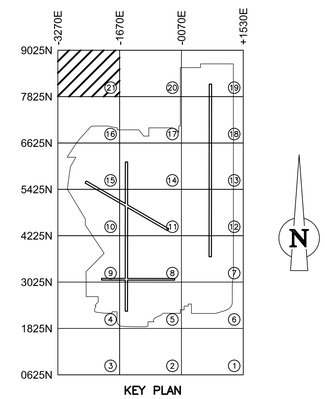

KEY PLAN

Users of this information should verify any/all critical information, systems and dimensions.

Projection: 3 degree Transverse Mercator, Central Meridian 114.
Survey Control: North American Datum, 1983 (NAD83)

Compiled photogammetrically by ATLIS Geomatics Inc.
Date of Aerial photography, July 2014.

Scale 20 0 20 40 60 80 100 180 METRES

CALGARY AIRPORT

Title

SITE GRID PLAN

21 OF 21

Issue Date: JANUARY 2015

YYC–SITE–GRID

Name: yyc-site-grid.dwg Plot Date: Jan 21, 2015 Time: 8:16 AM